UNITED STATES MARINE CORPS
THE BASIC SCHOOL
MARINE CORPS TRAINING COMMAND
CAMP BARRETT, VIRGINIA 22134-5019

HEAVY MACHINEGUNS
B3M0503XQ-DM
STUDENT HANDOUT

Heavy Machine Guns

Introduction

The following lesson will cover the description, general characteristics, and operation of the MK-19 MOD3 40mm grenade launcher and the Browning M2 HB .50 caliber heavy Machine Gun

Importance

For some, this block of instruction will be the last formal education on these weapons systems, though a large majority of you will be employing these assets in real world operations in the near future. Understanding the capabilities and having a working knowledge of these weapons systems is an important skill to maintain.

In This Lesson

This lesson covers the following topics:

Topic	Page
History and Description of M2 .50 cal	7
Capabilities/Limitations M2 .50 cal	9
Ammunition M2 .50 cal	10
Nomenclature M2 .50 cal	11
Operating Procedures M2 .50 cal	12
Assembly and Disassembly M2 .50 cal	16
Care and Maintenance M2 .50 cal	30
Headspace and Timing M2 .50 cal	33
Cycle of Operations M2 .50 cal	39
Mounts and Accessories M2 .50 cal	47
Review Questions	52
Review Question Answers	55
MK-19 MOD 3 Automatic Grenade Launcher	57
Capabilities/Limitations MK-19	58
Ammunition MK-19	59
Nomenclature MK-19	61
Operation MK-19	63
Disassembly and Assembly MK-19	70
Cleaning and Inspection MK-19	78
Cycle of operations MK-19	79
Mounts and Accessories MK-19	82
Review Questions MK-19	91
Review Question Answers MK-19	94
Summary	96
References	96
Glossary	96
Notes	97

Learning Objectives

Terminal Learning Objectives

TBS-CSW-2112 Given a defensive fighting position, with a designated sector of fire, recognizable targets, and principle direction of fire (PDF) or final protective line (FPL), a tripod mounted machine gun, lensatic compass, and writing materials, during regular visibility, prepare a range card with annotated data for range estimation and target acquisition.

TBS-CSW-2110 Given a Mk19 heavy machine gun on a vehicle mount or M3 tripod mount, ammunition, limited visibility sight, and a target, while wearing a fighting load, during regular and limited visibility, engage targets with the MK-19 heavy machine gun in order to achieve effects on target.

TBS-CSW-2109 Given a loaded Mk19 heavy machine gun, with a malfunction or stoppage not corrected by immediate action, while wearing a fighting load, perform remedial action on the MK-19 heavy machine gun to return the weapon to action.

TBS-CSW-2108 Given a Mk19 heavy machine gun and ammunition, while wearing a fighting load, perform immediate action on the MK-19 in order to return the weapon to action.

TBS-CSW-2107 Given a Mk19 heavy machine gun, mount, and ammunition, while wearing a fighting load, perform weapons handling procedures for the MK-19 without endangering personnel or equipment.

TBS-CSW-2106 Given an M2 heavy machine gun, a tripod, cradle, cleaning gear, and lubricants, maintain the weapon system to ensure it is complete, clean, and serviceable

TBS-CSW-2105 Given an M2 heavy machine gun, on a vehicle mount or M3 tripod mount, ammunition, optics, and a target, while wearing a fighting load, during regular and limited visibility, engage targets with the M2 heavy machine gun in order to achieve effects on target.

TBS-CSW-2104 Given a loaded M2 heavy machinegun with a malfunction or stoppage not corrected by immediate action, while wearing a fighting load, perform remedial action on the M2 heavy machine gun to return the weapon to action.

TBS-CSW-2103 Given a loaded M2 heavy machine gun, with a malfunction or stoppage not corrected by immediate action, while wearing a fighting load, perform remedial action on the M2 heavy machine gun to return the weapon to action.

TBS-CSW-2101 Given a M2 heavy machine gun, mount, and ammunition, while wearing a fighting load, perform weapons handling procedures for the M2 heavy machine gun without endangering personnel or equipment.

Learning Objectives (Continued)

Enabling Learning Objectives

TBS-CSW-2101a Given an evaluation, identify M2 heavy machine gun nomenclature without error.

TBS-CSW-2101b Given an evaluation, define weapons conditions for the M2 heavy machine gun in sequence without omission.

TBS-CSW-2101c Given an evaluation, recite the four weapons handling safety rules for the M2 heavy machine gun in sequence without error.

TBS-CSW-2101d Given a mounted M2 heavy machine gun, and a headspace and timing gauge, set headspace and timing on the weapon to bring the weapon into service in a time limit of 7 minutes.

TBS-CSW-2101e Given a mounted M2 heavy machine gun, replacement barrel, and a headspace and timing gauge, perform a barrel change on the heavy machine gun in a time limit of 7 minutes.

TBS-CSW-2101f Given an evaluation, identify types of M2 heavy machine gun ammunition without error.

TBS-CSW-2103a Given a loaded M2 heavy machine gun with a malfunction or stoppage, demonstrate hangfire procedures for a period of 5 seconds in order to prevent a hangfire.

TBS-CSW-2103b Given a loaded M2 heavy machine gun with a malfunction or stoppage, pull the charging handle to the rear to take the weapon out of battery and guard against cookoff.

TBS-CSW-2103c Given a loaded M2 heavy machine gun with a malfunction or stoppage, determine hot or cold barrel to determine immediate action precautions without endangering personnel or equipment.

TBS-CSW-2103d Given an evaluation, define the steps in the cycle of operations for the M2 heavy machine gun in sequence without error.

TBS-CSW-2104a Given a loaded M2 heavy machine gun with a malfunction or stoppage not corrected by immediate action, set the weapon to single shot mode to initiate remedial action.

TBS-CSW-2104b Given an evaluation, identify causes of stoppages for the M2 heavy machine gun without error.

TBS-CSW-2104c Given a loaded M2 heavy machine gun with a malfunction or stoppage not corrected by immediate action, inspect for stoppages to determine corrective action if required.

Learning Objectives (Continued)

Enabling Learning Objectives (Continued)

TBS-CSW-2104d Given a loaded M2 heavy machine gun with a malfunction or stoppage not corrected by immediate action, perform remedial action for a cartridge stuck in chamber and return the gun to action.

TBS-CSW-2104e Given a loaded M2 heavy machine gun with a malfunction or stoppage not corrected by immediate action, perform remedial action for cartridge stuck on T-slot to return the gun to action.

TBS-CSW-2105d Given an evaluation, identify the maximum range of the M2 .50 caliber machine gun without error.

TBS-CSW-2105e Given an evaluation, identify the maximum effective range of the M2 .50 caliber machine gun without error.

TBS-CSW-2107a Given an evaluation, identify Mk19 heavy machine gun nomenclature without error.

TBS-CSW-2107c Given a Mk19 heavy machine gun, mount, and ammunition, while wearing a fighting load, clear a Mk19 heavy machine gun to remove all sources of ammunition.

TBS-CSW-2107d Given an evaluation, identify the types of Mk19 heavy machine gun ammunition without error.

TBS-CSW-2107e Given a Mk19 heavy machine gun, mount, and ammunition, while wearing a fighting load, load a Mk19 heavy machine gun to enable target engagement.

TBS-CSW 2107f Given an evaluation, identify characteristics of the Mk19 heavy machine gun without error.

TBS-CSW-2108a Given an evaluation, define Mk19 misfire procedures in sequence without error.

TBS-CSW-2108b Given an evaluation, define Mk19 hangfire procedures in sequence without error.

TBS-CSW-2108d Given an evaluation, identify steps in the Mk19 cycle of operations in sequence without error.

TBS-CSW 2107f Given an evaluation, identify characteristics of the Mk19 heavy machine gun without error.

TBS-CSW-2108a Given an evaluation, define Mk19 misfire procedures in sequence without error.

Learning Objectives (Continued)

Enabling Learning Objectives (Continued)

TBS-CSW-2108b Given an evaluation, define Mk19 hangfire procedures in sequence without error.

TBS-CSW-2108d Given an evaluation, identify steps in the Mk19 cycle of operations in sequence without error.

TBS-CSW-2108e Given an evaluation, define Mk19 remedial action procedures in sequence without error.

TBS-CSW-2109a Given an evaluation, define weapons conditions for the Mk19 heavy machine gun in sequence without omission.

TBS-CSW-2109b Given a scenario, identify causes of stoppages for the Mk19 heavy machine gun without error.

TBS-CSW-2110a Given a Mk19 heavy machine gun on a vehicle mount or M3 tripod mount, assume a supported firing position to facilitate observation and engagement of targets and minimize exposure to fire.

TBS-CSW-2110b Given an evaluation, define rates of fire for the Mk19 without error.

TBS-CSW-2110c Given an evaluation, identify the minimum safe distance for engagement with the Mk19 heavy machine gun in a combat environment without error.

TBS-CSW-2110d Given an evaluation, identify the minimum safe distance for engagement with the Mk19 heavy machine gun in a training environment without error.

TBS-CSW-2112a Given a defensive fighting position, with a designated sector of fire, recognizable targets, and principle direction of fire (PDF) or final protective line (FPL), a tripod mounted machine gun, lensatic compass, and writing materials, during regular visibility, illustrate a machine gun position on a range card in the correct location with the appropriate graphic.

TBS-CSW-2112b Given a defensive fighting position, with a designated sector of fire, recognizable targets, and principle direction of fire (PDF) or final protective line (FPL), a tripod mounted machine gun, lensatic compass, and writing materials, during regular visibility, determine azimuths to key terrain features or Target Reference Points (TRPs) within a tolerance of 5 degrees.

TBS-DEF-1002a Given an evaluation, identify machine gun capabilities and limitations without omission.
TBS-OFF-1002e Given a machine gun unit, a mission, and an order, supervise resupply of machine guns to sustain and support to the ground scheme of maneuver.

M2 .50 Caliber Machine Gun History and Description

History. The M2 is undoubtedly the world's best-known .50 caliber heavy machine gun. John M. Browning developed the M2 heavy machine gun at the end of World War I. After a series of early water-cooled, aircraft, and tank models were tested in the 1920s, an improved version was adopted in 1933 as the Browning M2 water-cooled machine gun. Subsequent models, using the same receiver, were adopted by the various services. During World War II, nearly two million M2 machine guns of all variations were produced. The M2 is the mainstay of all Marine Corps heavy machine gun platoons.

Description. The Browning machine gun caliber .50 HB, M2 (see picture below) is a belt-fed, recoil-operated, air-cooled, crew-served machine gun. The gun is capable of single shot, as well as automatic fire, and operates on the short recoil principle.
The machinegun is capable of being fed from either the right or left by repositioning certain parts. The weapon has nonfixed headspace that must be set. Timing must also be adjusted to cause the gun to fire slightly out of battery to prevent damage to moving parts. The force for recoil operation is furnished by expanding powder gases, which are controlled by various springs, cams, and levers. Maximum surface of the barrel and receiver are exposed to permit air-cooling. Perforations in the barrel support allow air to circulate around the breach end of the barrel and help cool the parts. A heavy barrel is used to retard early overheating.

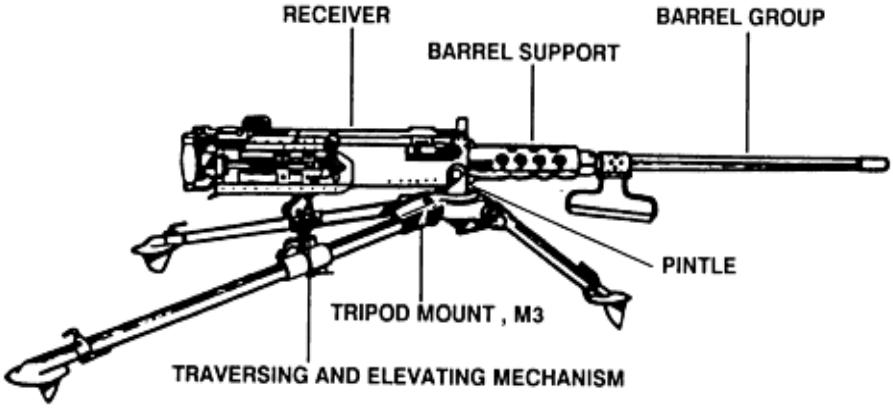

M2 .50 Caliber Machine Gun

M2 .50 Caliber Machine Gun History and Description (Continued)

Sights. The M2 .50 caliber machine gun has a leaf-type rear sight (see diagram below), graduated in both yards and mils. The scale ranges from 100 to 2,600 in yards and from 0 to 62 in mils.

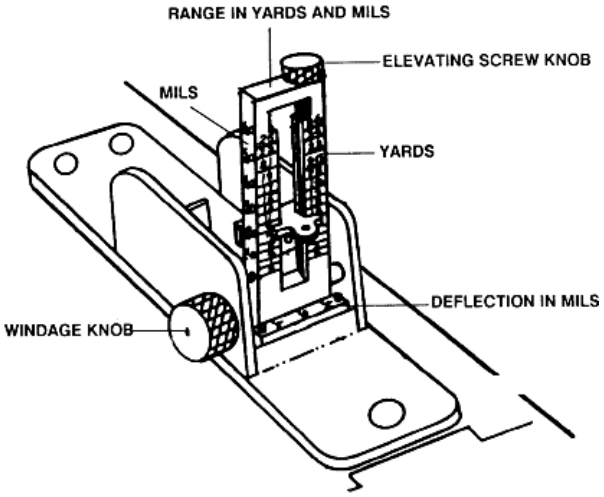

M2 .50 Caliber Machine Gun Sights

The windage knob permits deflection changes to right or left of center. The front sight is a fixed blade type with cover (see diagram below).

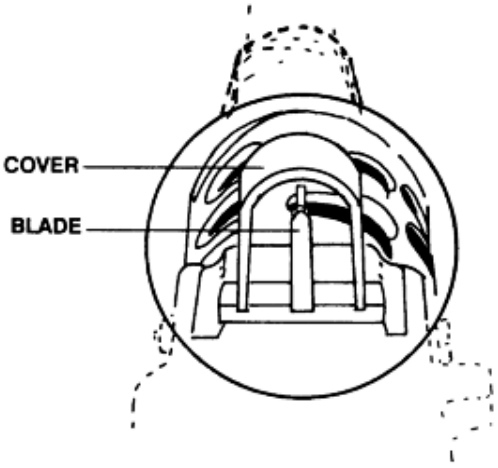

Front Sight Blade

M2 .50 Caliber Machine Gun Capabilities/Limitations

The table below lists the characteristics of the M2 .50 caliber machine gun.

Characteristic	Specification
Weight • Receiver	 60 pounds
• Barrel	24 pounds
• Tripod	44 pounds
Total	128 pounds
Length	
Receiver with barrel installed	65 inches
Barrel	45 inches
Rifling	Eight lands and grooves with a right-hand twist One turn in 15 inches

The table below lists the velocity, rates of fire and ranges of the M2 .50 caliber machine gun

Rates of Fire Sustained	 Less than 40 rounds per minute (rpm)
Rapid	40 or more rpm
Cyclic	450-550 rpm
Range Maximum	 7400 meters
Maximum Effective	1830 meters
Grazing fire	700 meters

M2 .50 Caliber Machine Gun Ammunition

The table below lists the ammunition (see diagram below) used in the M2 .50 caliber machine gun.

Type	Identifying Characteristics
M2 – Dummy	• Plain • Holes in cartridge
M1, M1A1 – Blank	• No bullet, crimped cartridge
M2, M33 – Ball	• Plain
M1, M10, M17 – Tracer	• Red, orange, or brown tip
M1, M23 – Incendiary	• Blue tip
M2 – Armor piercing	• Black tip
M8 – Armor-piercing incendiary	• Aluminum tip
M20 – Armor-piercing incendiary-tracer	• Aluminum tip with red ring
M903 – Sabot light armor penetrator	• Amber tinted round
M962 – Sabot light armor penetrator-tracer	• Red tinted round

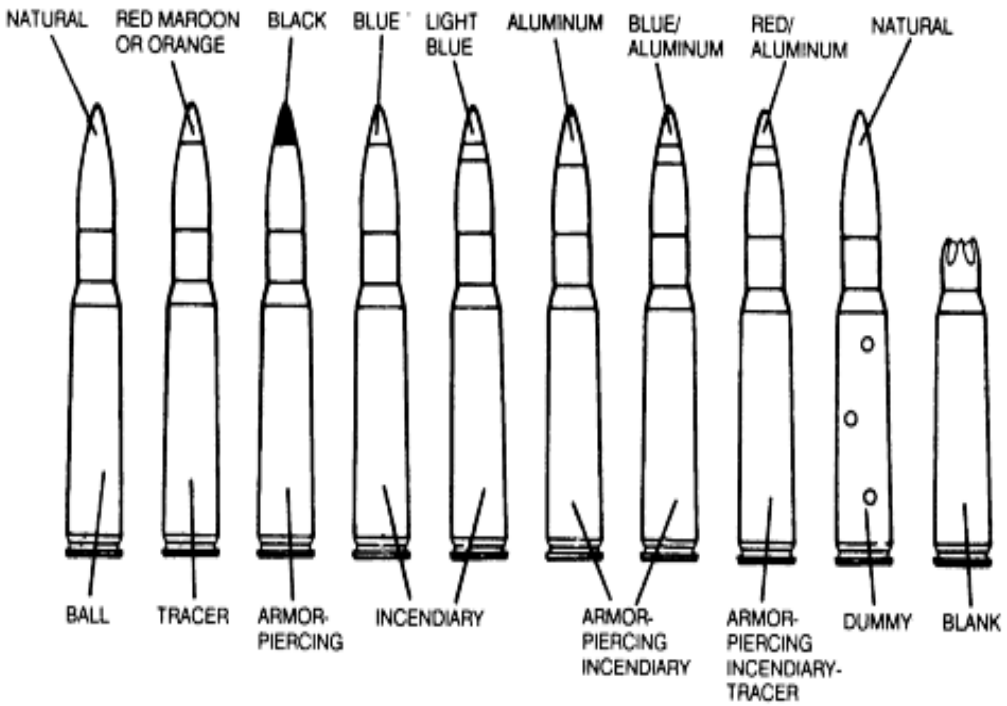

M2 .50 Caliber Machine Gun Ammunition

M2 .50 Caliber Machine Gun Nomenclature

The major components of the 50 caliber HMG (see diagram below) and their purposes are shown in the table below:

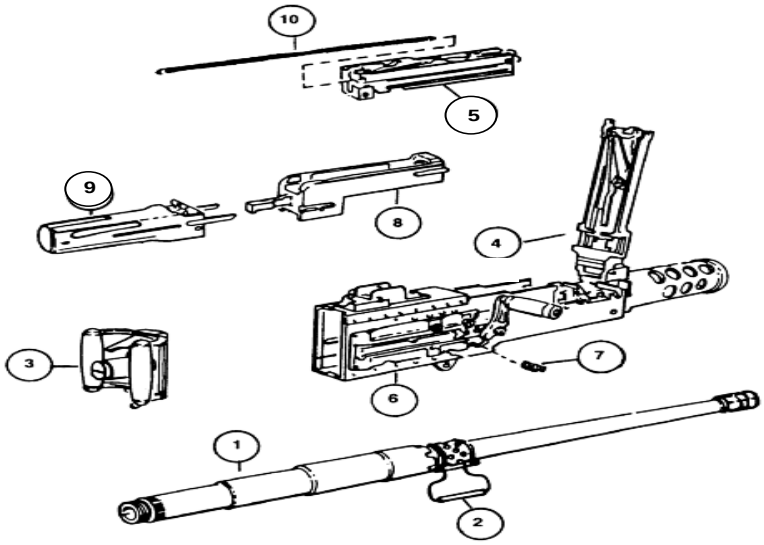

M2 .50 Caliber Machine Gun Components

Diagram Number	Component	Purpose
1	Barrel group	• Houses cartridges for firing • Directs projectile
2	Carrier assembly	Provides handle to: • Carry barrel • Remove barrel from the receiver
3	Backplate group	Houses the: • Trigger • Bolt latch releases lock • Buffer tube sleeve • Left and right spade grips
4	Cover group	• Feeds linked belt ammunition • Positions and holds cartridges in position for extracting, feeding, and chambering
5	Bolt group	• Provides feeding, chambering, firing, and extracting, using the propellant gases and recoil spring for power

M2 .50 Caliber Machine Gun Nomenclature (Continued)

6	Receiver group	• Serves as support for all major components • Houses action of weapon, which controls functioning of weapon
7	Bolt stud	• Provides a means to move the bolt to the rear with the retracting slide handle
8	Barrel extension group	• Secures the barrel to the recoiling parts
9	Barrel buffer body	• Assists in recoil and counter-recoil of the bolt group
10	Driving spring rod assembly	• Drives the bolt forward when the bolt latch release is depressed

M2 .50 Caliber Machine Gun Operating Procedures

Weapon Conditions: . The table below lists the weapon conditions for the M2 .50 caliber machine gun.

Condition	Description
1	• Bolt forward Weapon on Safe • A round in the chamber ***This condition is also referred to as full load***
2	• Bolt forward on an empty chamber • Rounds all the way against the cartridge stop Weapon on Safe ***This condition is also referred to as half load.***
3	• Bolt forward on an empty chamber • Rounds inserted and held in place by the belt feeding pawl Weapon on Safe
4	• Bolt forward on an empty chamber • No source of ammunition Weapon on Safe

Unloading & Clearing: The table below lists the steps for unloading/clearing the M2 .50 caliber machine gun. Ensure the weapon is pointed in a safe direction.

Step	Action
1	Ensure the barrel is cold. If hot (150 rounds in 2 minutes or less), let the weapon sit for 15 minutes.
2	Place weapon in single shot mode. Lock the bolt to the rear by pulling the retracting slide handle to the rear while maintaining positive control.
3	Open the top cover and remove the source of ammunition. Inspect the chamber to ensure it is clear.

M2 .50 Caliber Machine Gun Operating Procedures (Continued)

Weapon Commands. The table below lists the steps to execute "LOAD" taking the M2 .50 caliber machine gun from condition 4 to condition 2.

1	Point the weapon in a safe direction. Ensure weapon is in single shot mode.
2	Ensure the weapon is in condition 4: • No rounds inserted anywhere in the weapon • Bolt forward • An empty chamber
3	Raise cover, lift extractor ejector, and slightly pull bolt to the rear.
4	Insert the double loop end of the belt in the feedway until the rounds meet the cartridge stop and place the extractor ejector between the first and second rounds. Close cover. Weapon is now half-loaded.

The table below lists the steps to execute "MAKE READY" taking the M2 .50 caliber machine gun from condition 2 to condition 1.

1	Point the weapon in a safe direction.
2	Ensure the bolt latch release is locked down. Ensure the weapon is on automatic.
3	Pull the retracting slide handle to the rear and release it. **CAUTION**: The weapon is fully loaded.

The table below lists the steps to execute "UNLOAD/CLEAR GUN" taking the M2 .50 caliber machine gun to condition 4.

Step	Action
1	Ensure the barrel is cold. If hot (150 rounds in 2 minutes or less), let the weapon sit for 15 minutes.
2	Point the weapon in a safe direction and ensure weapon is in single shot mode
3	Pull the retracting slide handle to the rear and maintain positive control.
4	Raise the top cover.
5	Remove the ammunition from the feedway.
6	Examine the chamber and T-slot to ensure they are clear of ammunition.
7	Insert a cleaning rod in the muzzle end of the barrel and push it through the bore until it can be seen in the receiver ensuring that the weapon is clear.
8	Return the retracting slide handle forward and depress the bolt latch release sending the bolt forward.
9	Close the cover.

M2 .50 Caliber Machine Gun Operating Procedures (Continued)

Malfunctions. A malfunction is any failure of the gun to function satisfactorily. Examples of malfunctions are:

- **Failure to function freely**: Sluggish operation is usually due to human failure to eliminate excessive friction caused by
  - Dirt
  - Lack of proper lubrication
  - Burred parts
  - Incorrect headspace adjustment
  - Incorrect timing

  Uncontrolled Automatic Fire: Uncontrolled automatic fire (runaway gun) is when fire continues even when the trigger or trigger control mechanism is released. If the cause is present before the gun is fired, the gun will start to fire when the recoiling groups move into battery the second time. If the defect occurs during firing, the gun will continue firing when the trigger control mechanism is released. A runaway gun may be caused by
  - A bent trigger lever, forward end of the trigger lever sprung downward
  - Burred beveled contacting surfaces of the trigger lever and sear
  - A jammed or broken side-plate trigger

  To stop the uncontrolled automatic fire,
  - Keep the gun laid on target.
  - Twist the belt, causing the gun to jam.

    CAUTION: Do not unlatch the cover.

    - Wait 15 minutes to guard against cook off.
    - Clear weapon.
    - Replace broken, worn, or burred parts.
    - Check the side-plate trigger and trigger control mechanism, when applicable.

M2 .50 Caliber Machine Gun Operating Procedures (Continued)

Stoppage. A stoppage is any interruption in the cycle of operation caused by the faulty action of the gun or ammunition. Stoppages are classified as follows:

- Failure to Feed: Prevents the round from being properly positioned in the receiver group.
- Failure to Chamber: Prevents the complete chambering of the round.
- Failure to Lock: Prevents the breech lock from correctly entering its recess in the bolt.
- Failure to Fire: Prevents the ignition of the round.
- Failure to Unlock: Prevents the breech lock from moving out of its recess in the bolt.
- Failure to Extract: Prevents the extraction of the expended cartridge from the chamber.
- Failure to Eject: Prevents the ejection of the expended cartridge from the receiver.
- Failure to Cock: Prevents the firing pin extension from being engaged with the sear.

Immediate Action: Immediate action is the prompt action taken by the gunner without investigating the cause. The gunner performs immediate action; however, every crewmember must be trained to apply immediate action. The table below lists the steps to follow to reduce most stoppages without analyzing their cause in detail.

Step	Action
1	Yell, “Misfire!” 3 times to inform the gun line that you have a stoppage or malfunction.
2	Wait 5 seconds for the possibility of a hang fire.
3	Within the next 5 seconds, pull the bolt to the rear to guard against a cook-off while observing for feeding and ejecting.
4	If feeding and ejecting occur, aim in and attempt to fire. If weapon Fires continue mission.
5	If the weapon misfires again repeat steps 1-4 for a total of 3 times before moving to remedial action.
6	If feeding and ejecting does not occur place weapon on safe and determine if the barrel is hot. If so wait 15 minutes for barrel to cool down.
7	Once the barrel is cool, proceed to remedial action.

M2 .50 Caliber Machine Gun Operating Procedures (Continued)

Remedial Action: Remedial action is the detailed examination of the weapon and ammunition to determine the cause of the stoppage.

Removal of a cartridge from the T-Slot: If the cartridge does not fall out during immediate action:

- Put the weapon on single shot and pull the bolt to the rear.
- Hold the bolt to the rear pulling out all slack.
- With the extractor raised, use a cleaning rod to push the cartridge out the bottom of the receiver, or reach under the gun and push the round up out of the T-slot.

Removal of a ruptured cartridge: You may remove a ruptured (separated) cartridge case with a cleaning rod or ruptured cartridge extractor. When using the ruptured cartridge extractor:

- Raise the cover and pull the bolt to the rear.
- Place the ruptured cartridge extractor in the T-slot of the bolt in the same manner as that of a cartridge, so that it is held in line with the bore by the ejector of the extractor assembly of the gun.
- With the extractor aligned with the bore and held firmly in the T-slot, let the bolt go forward into the ruptured case; the shoulders will spring out in front of the case.
- Pull the bolt to the rear and remove the ruptured case and extractor.

M2 .50 Caliber Machine Gun Assembly and Disassembly

Disassembly: Take the precautions below when working with the M2 .50 caliber machine gun:

1. Ensure the weapon is clear prior to further handling of the weapon.

2. Before allowing the bolt to go forward, ensure that the cover, once raised, remains in the raised position with the barrel remaining in the gun.

> **CAUTION**: If the cover is lowered when the bolt is to the rear, the belt feed lever lug will not fit into its proper groove in the bolt; parts may be damaged as the bolt goes forward. In the cover assembly, the action of the shoulder headless pin and spring just above the pivot holds the belt feed lever lug to the left.

To allow the bolt to go forward with the barrel out of the gun, pull the retracting slide handle to the rear, engaging the bolt stud in the notch in the rear of the retracting slide. Maintain a steady pressure to the rear on the retracting slide handle. Press the bolt latch release and allow the bolt to ride slowly forward.

M2 .50 Caliber Machine Gun Assembly and Disassembly (Continued)

CAUTION: If the bolt is allowed to go forward with the barrel out of the gun, parts may be damaged when the bolt slams forward. The added weight and cushioning effect of the barrel act as a buffer and protect the parts from damage.

General Disassembly: General disassembly consists of removing the major groups and assemblies (see diagram below) for inspection and cleaning. The table below lists the eight major groups that must be disassembled in the order they should be removed.

Sequence	Major Group
1	Barrell Group
2	Back-Plate Group
3	Driving Spring Rod Assembly
4	Bolt Group
5	Barrel Extension
6	Barrel Buffer Assembly
7	Barrel Buffer Assembly
8	Receiver Group

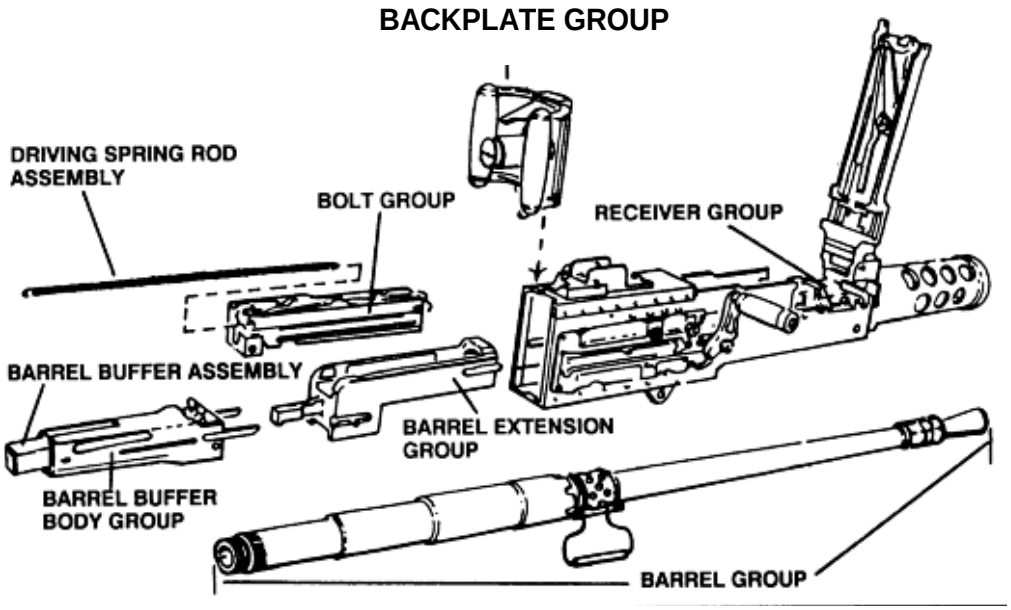

M2 .50 Caliber Machine Gun Major Component Groups

M2 .50 Caliber Machine Gun Assembly and Disassembly (Continued)

- **Barrel Group**: Follow the steps in the table below to remove the barrel group.

Step	Action
1	Turn the cover latch and raise the cover group (see diagram below). 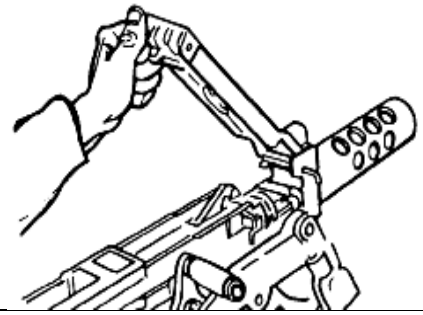
2	Grasp the retracting slide handle with the right hand, palm up, and pull the recoiling parts to the rear until the lug on the barrel locking spring aligns with the 3/8-inch hole in the right sideplate of the receiver (just below the feedway exit). The barrel can be turned only when the lug is aligned with the 3/8-inch hole.
3	Unscrew the barrel from the receiver (see diagram below)**.** **CAUTION**: Be careful not to damage the threads or barrel locking notches when setting the barrel down. 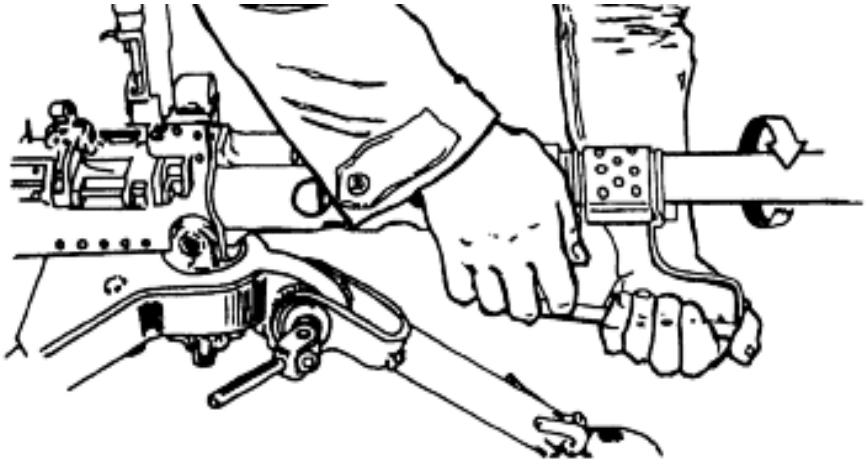
4	Pull back slightly on the retracting slide handle and remove the link or spacer from the receiver.

M2 .50 Caliber Machine Gun Assembly and Disassembly (Continued)

- **Back-plate Group**: Follow the steps in the table below to remove backplate group:

Step	Action
1	Ensure that the bolt latch release is up, free of the bolt latch release lock. If it is not, push down on the bolt latch release and turn the buffer tube sleeve to the right to free it (see diagram below). 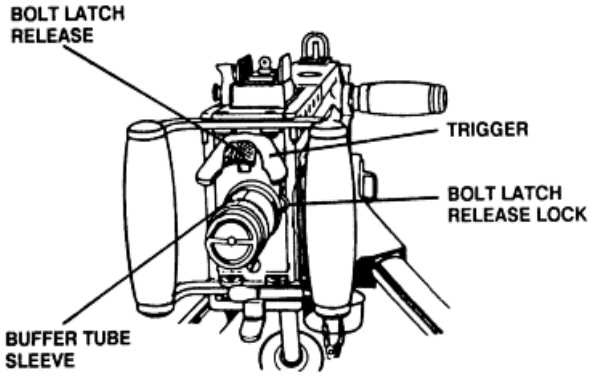
2	The bolt must be forward before the backplate is removed. If the bolt is to the rear, push down on the bolt latch release, place palm up on the retracting slide handle, and ease the bolt forward. **CAUTION**: Take care to prevent the bolt from slamming forward with the barrel removed.
3	The backplate latch lock and latch are below the buffer tube. Pull out on the lock and up on the latch; remove the backplate by lifting it straight up. 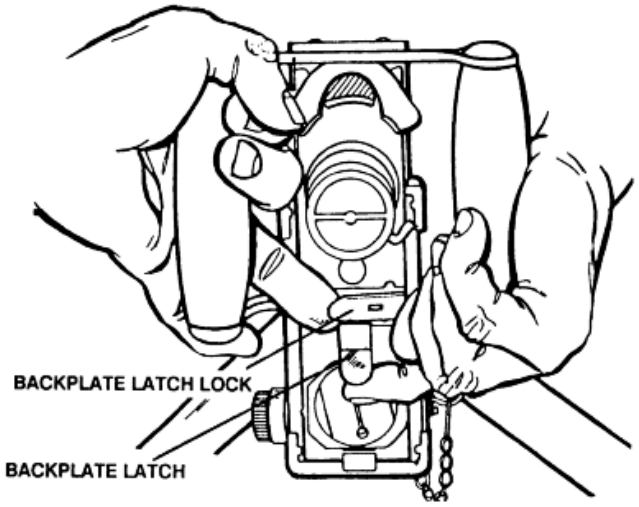

WARNING: Never attempt to cock the gun while the backplate is off and the driving spring assembly is in place. If the backplate is off and the driving spring assembly is compressed, the retaining pin on the driving spring rod can slip from its seat in the sideplate and seriously injure anyone behind the gun.

M2 .50 Caliber Machine Gun Assembly and Disassembly (Continued)

- **Driving Spring Rod Assembly**: Follow the steps on the next page to remove the driving spring rod assembly.

Step	Action
1	The inner and outer driving springs and driving spring rod are located inside the receiver next to the right sideplate (see diagram below). 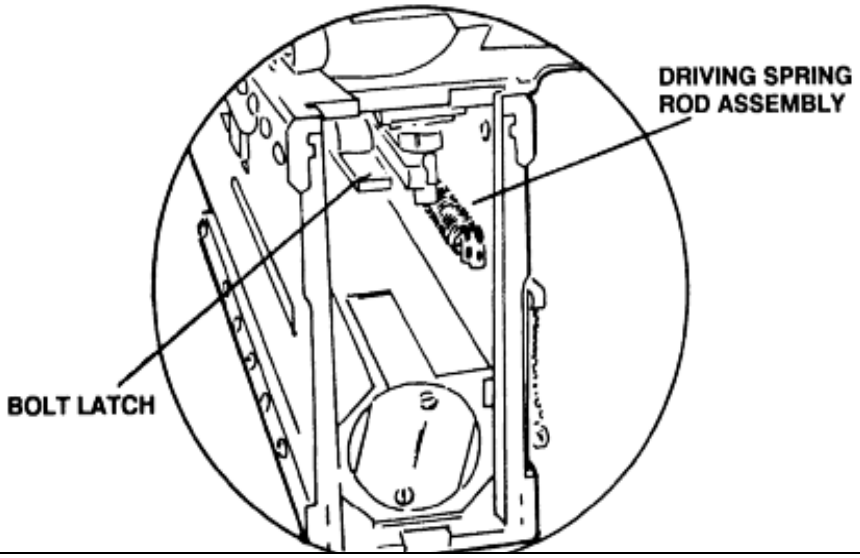
2	Push in on the head of the driving spring rod and push to the left to remove the driving spring rod retaining pin from its seat in the right sideplate.
3	Pull the driving spring assembly to the rear and out of the receiver.

M2 .50 Caliber Machine Gun Assembly and Disassembly (Continued)

- **Bolt Stud**: Follow the steps in the table below to remove the bolt stud.

Step	Action
1	Grasp the retracting slide handle and give it a quick jerk, freeing the bolt from the barrel extension.
2	Align the collar of the bolt stud with the clearance hole in the bolt slot on the right sideplate and remove the bolt stud (see diagram below). 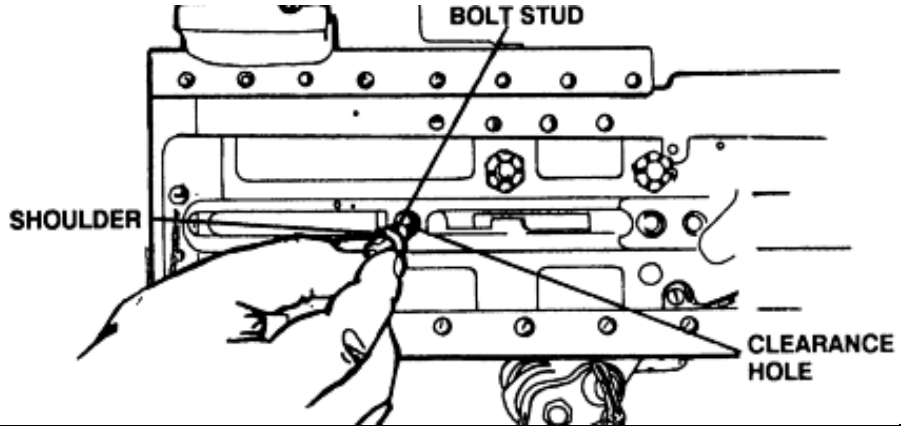
3	If the bolt is accidentally moved all the way to the rear, the bolt latch will engage in the bolt latch notches in the top of the bolt. If this occurs, raise the bolt latch (left of the trigger lever) and push the bolt forward to align the bolt stud with the clearance hole (see diagram below). 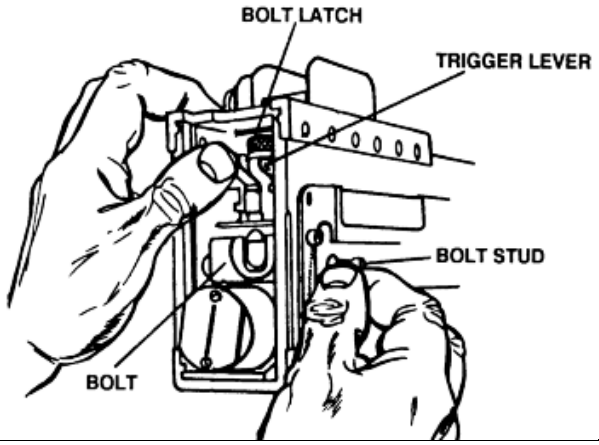

M2 .50 Caliber Machine Gun Assembly and Disassembly (Continued)

- **Bolt Group**: Follow the steps in the table below to remove the bolt group.

Step	Action
1	After freeing the bolt, slide it to the rear and out of receiver (see diagram below). 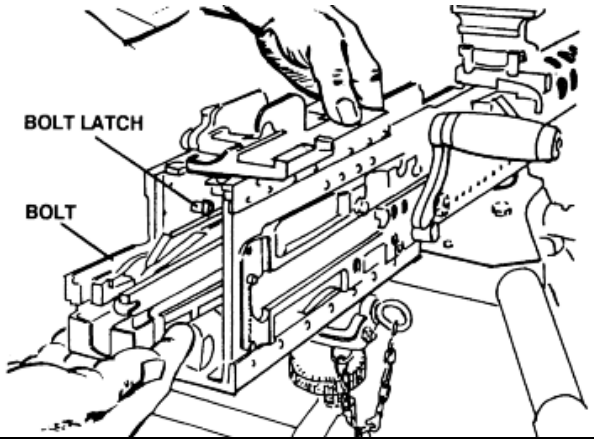
2	Place the bolt down on its right side (with the extractor arm up), so that the extractor will not fall from the bolt.

M2 .50 Caliber Machine Gun Assembly and Disassembly (Continued)

- **Barrel Buffer Body Group and Barrel Extension Group**: Follow the steps on the next page to remove the barrel buffer body and barrel extension groups.

Step	Action
1	Insert the drift of a combination tool, or other pointed instrument, through the hole in the lower rear corner of the right sideplate.
2	Push in on the barrel buffer body lock. At the same time, place one hand in the receiver and push the barrel extension group and barrel buffer group to the rear (see diagram below). 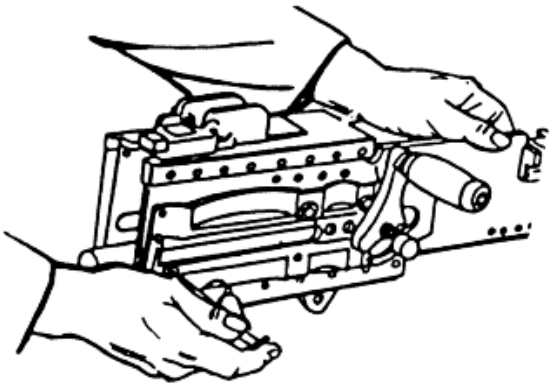
3	Remove the barrel buffer group and barrel extension group from the receiver.
4	Separate the two groups by pushing forward on the tips of the accelerator (see diagram below). 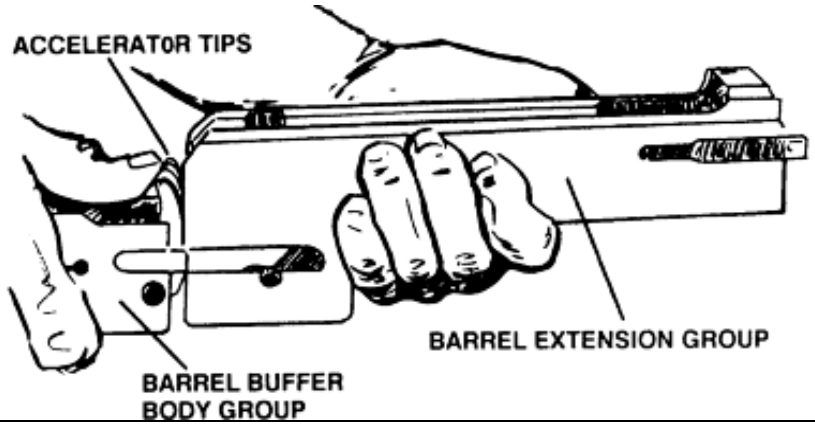

M2 .50 Caliber Machine Gun Assembly and Disassembly (Continued)

- **Barrel Buffer Assembly**: Follow the steps in the table below to remove the barrel buffer assembly and complete general disassembly.

Step	Action
1	Pull the barrel buffer assembly from the rear of the barrel buffer body group.
2	The barrel buffer assembly will not be disassembled (see diagram below). 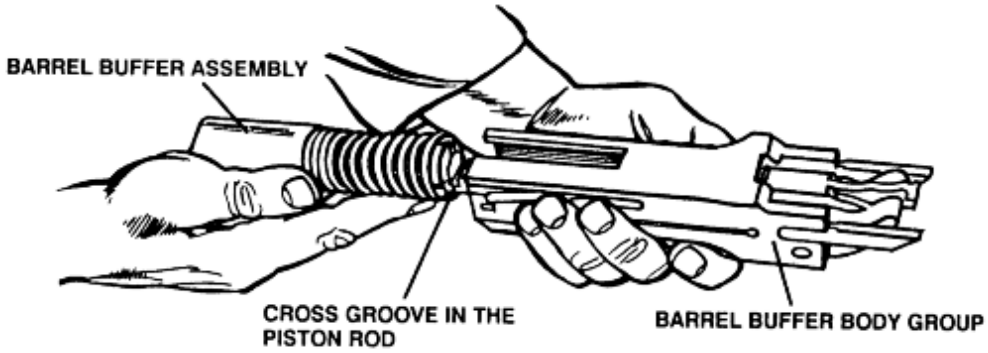

General Assembly: To assemble the gun, replace the groups and assemblies in reverse order of their removal in disassembly.

M2 .50 Caliber Machine Gun Assembly and Disassembly (Continued)

- **Barrel Buffer Assembly and Barrel Buffer Body Group:** Follow the steps in the table below to assemble the barrel buffer assembly and barrel buffer body groups.

Step	Action
1	Replace the barrel buffer assembly in the barrel buffer body group, with the key on the spring guide to the right. **NOTE**: This key must fit in its slot in the right side of the barrel buffer body.
2	Turn the barrel buffer tube until the screwdriver slot (in the rear of the tube) is vertical and the arrow is pointing to the right (see diagram below). The stud on the tube lock will now engage the serrations in the barrel buffer tube to keep the tube from turning. 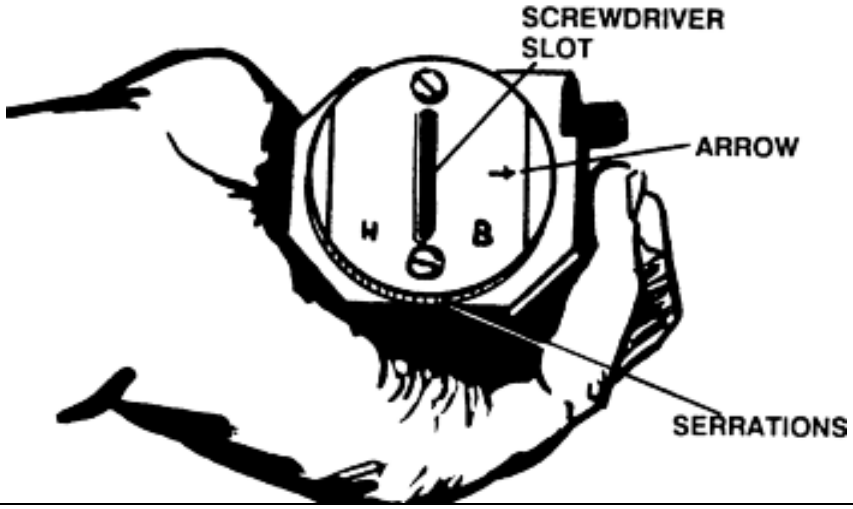
3	Push the barrel buffer assembly fully forward (see diagram below). 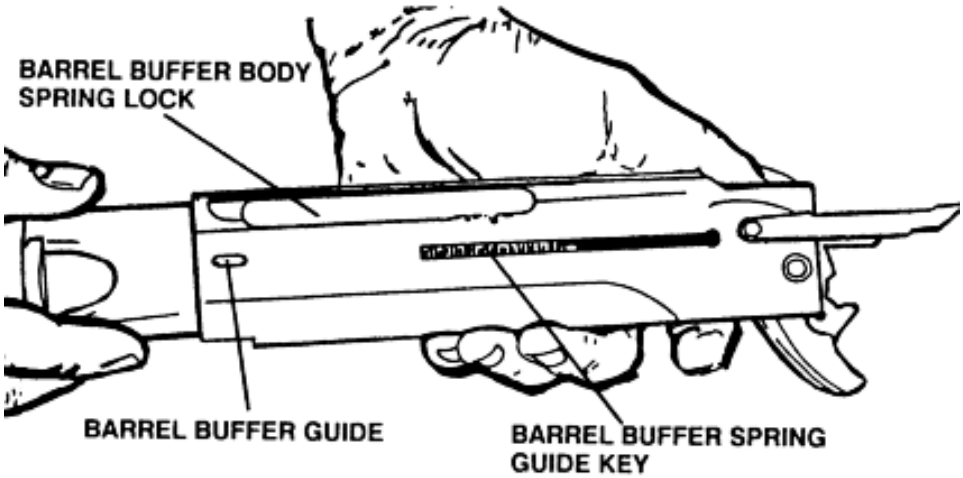

M2 .50 Caliber Machine Gun Assembly and Disassembly (Continued)

- **Barrel Buffer Group and Barrel Extension Group**: Follow the steps in the table below to assemble the barrel buffer and barrel extension groups.

Step	Action
1	To join the two groups together, hold the barrel buffer group in the right hand, with the index finger supporting the accelerator. Join the notch on the shank of the barrel extension group with the cross-groove in the pistol rod of the barrel buffer assembly. At the same time, align the breech lock depressors with their guideways in the sides of the barrel extension, ensuring that the tips of the accelerator are against the rear end of the barrel extension (claws against the shank) (see diagram below). 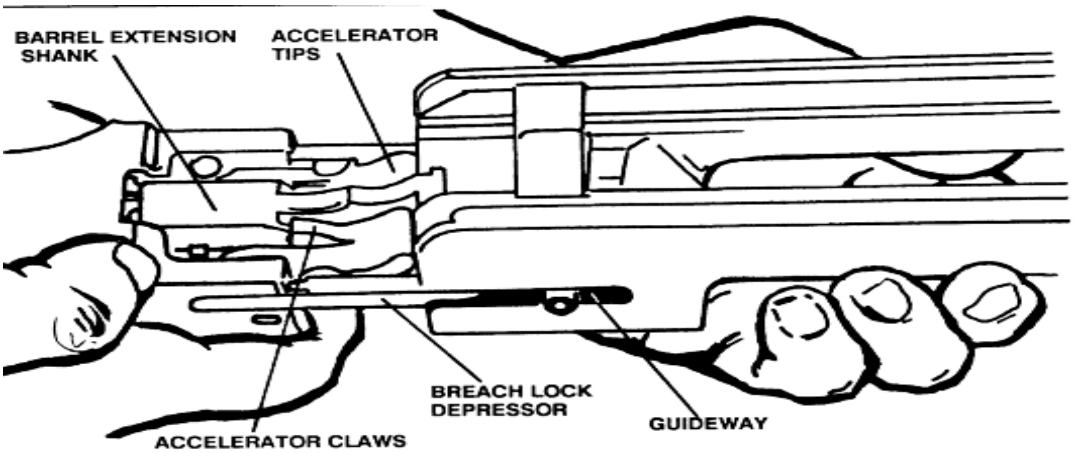
2	Push the groups together.
3	As the accelerator rotates to the rear, press down on its tips to ensure positive locking of groups.
4	Slide the bolt group back on to the barrel extension group. Place the groups in the receiver, and push them forward until the barrel buffer body spring lock snaps into position. **NOTE**: When the parts are properly locked in place, the barrel buffer tube should protrude about 1 1/8 inches from the rear of the barrel buffer body group.

M2 .50 Caliber Machine Gun Assembly and Disassembly (Continued)

- **Bolt**: Place the bolt in the receiver, with the top of the cocking lever forward and the extractor down. The barrel extension, barrel buffer, and bolt groups may be assembled and returned to the receiver together (see diagram below). Press up on the bolt latch in the receiver to slide the bolt, barrel extension and buffer body groups into the receiver.

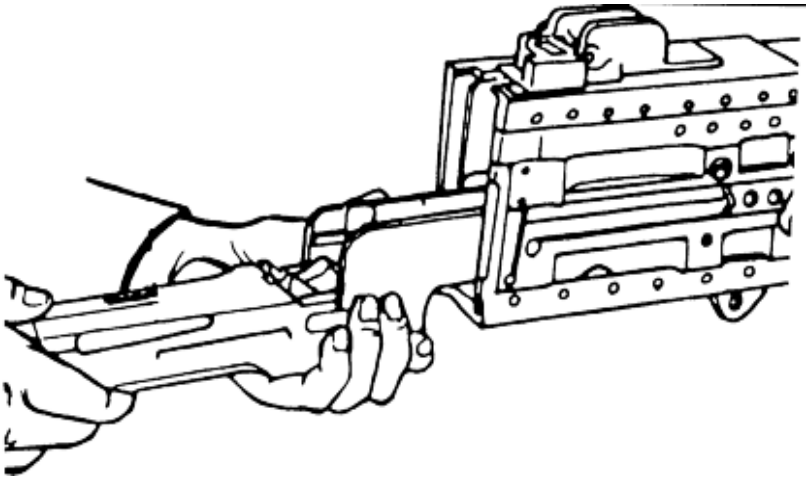

M2 .50 Caliber Machine Gun Bolt

- **Bolt Stud**: Follow the steps in the table below to assemble the bolt stud.

Step	Action
1	Align the stud hole in the bolt with the clearance hole.
2	Replace the bolt stud, ensuring that the collar of the stud is inside the sideplate (see diagram below). 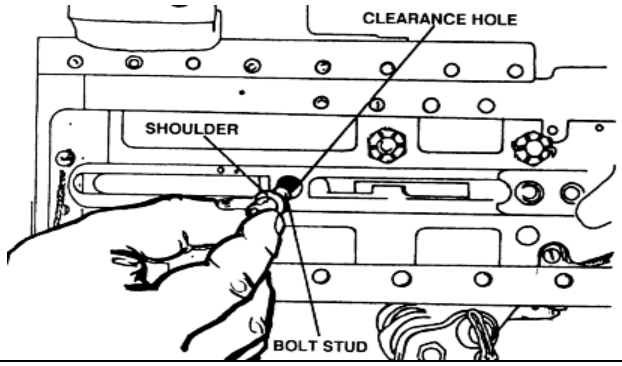
3	Push forward on the bolt stud until the bolt is fully forward.

M2 .50 Caliber Machine Gun Assembly and Disassembly (Continued)

- **Driving Spring Group**: Follow the steps in the table below to assemble the driving spring group.

Step	Action
1	Press up on the bolt latch and push the bolt all the way forward by pushing on the bolt stud only.
2	Place the end of the driving spring rod in its hole in the rear of the bolt and push forward on the driving spring group and the barrel buffer tube.
3	Press in and to the right on the head of the driving spring rod and place the retaining pin in its seat in the right sideplate.

NOTE: At this time, the barrel buffer tube should be completely inside the receiver. If not, the barrel buffer body spring is not properly seated.

- **Backplate Group**: Follow the steps in the table below to assemble the backplate group.

Step	Action
1	Hold the backplate with the latch down and the trigger up; place the backplate guides in their guideways.
2	Hold out on the latch lock and tap the backplate into position until the latch snaps into place (see diagram below). 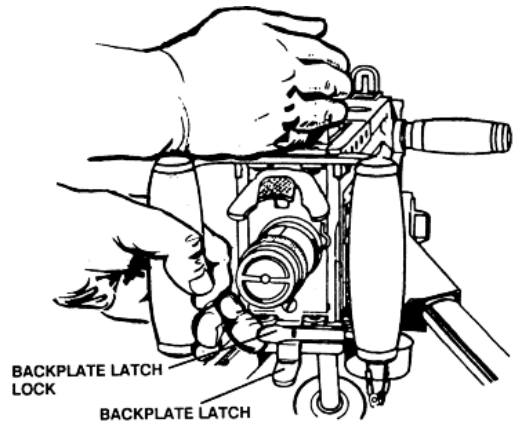
3	Release the latch lock and pull up on the backplate group to ensure it is firmly seated.

CAUTION: Do not use the driving rod to drive the bolt forward from the rear position, or you may damage the driving spring group and cause a stoppage.

M2 .50 Caliber Machine Gun Assembly and Disassembly (Continued)

- **Barrel:** Follow the steps in the table below to assemble the barrel and complete general assembly of the M2 .50 caliber machine gun.

Step	Action
1	Pull the retracting slide handle to the rear until the lug on the barrel locking spring is visible through the 3/8-inch hole in the right sideplate.
2	Screw the barrel all the way into the barrel extension; then unscrew the barrel two notches.

- **Function Check**: Perform a function check as soon as the weapon is assembled to ensure that it has been assembled correctly. Follow the steps in the table below to check the function of the weapon.

Step	Action
1	Place the weapon in the single-shot mode.
2	With the cover closed, lock the bolt to the rear (bolt should stay to rear while in the single-shot mode).
3	Return retracting slide handles to full forward position and press the bolt latch release.
4	Press down on the trigger; weapon should fire. (Check T-slot to ensure that firing pin does protrude.) Open the cover.
5	Place the weapon in the automatic-fire mode.
6	Pull the retractor slide handle to the rear and release. (Bolt should not lock to rear.)
7	Make sure firing pin does not protrude.
8	Press trigger; weapon should fire.
9	Make sure firing pin does protrude.

M2 .50 Caliber Machine Gun Care and Maintenance

- **Care and Cleaning**: To ensure proper care of the M2 .50 caliber machine gun, follow a system of maintenance or an SOP for the frequency of cleaning. Clean each gun:

  - As soon after firing as possible
  - Each time it is exposed to field conditions
  - Combat conditions, clean and oil the gun daily
  - Extreme climatic and combat conditions, you may have to clean and lubricate it more frequently
  - Ideal conditions, where the gun is not used and is stored in a clean, dry place, you may only have to inspect, clean, and lubricate every five days

Disassemble, clean, and oil the gun in a clean, dry location. If possible, when not in use, keep the gun covered with a:

  - Gun cover
  - Canvas
  - Tarpaulin
  - Poncho

- **Routine Care and Cleaning**: Before firing (when the situation permits), follow the steps in the table below to ensure efficient functioning of the machine gun.

Step	Action
1	Disassemble the gun into its major groups or assemblies.
2	Clean the bore and chamber, and lightly oil them.
3	Clean all metal parts thoroughly with CLP.

- **Care and Cleaning Under Unusual Conditions**: Extreme cold, hot, dry, and tropical climates affect the gun and its functioning. Take care under these climatic conditions to ensure that the gun is:

  - Cleaned daily with the prescribed lubricants
  - Protected from the elements by some sort of cover if possible

TM 9-1005-213-10 provides further information on care and cleaning of the gun under unusual climatic conditions.

M2 .50 Caliber Machine Gun Care and Maintenance (Continued)

- **Care and Cleaning of M3 Mount and Accessories**: Keep the mount, accessories, and spare parts clean and lubricated. Spot paint surfaces when necessary. Inspect moving surfaces and oil them with the prescribed lubricant. Keep all external surfaces of the mount clean and lightly oiled. Be particularly careful to keep the pintle bushing clean and lightly oiled and ensure that the pintle lock release cam is well lubricated and free from grit. Clean and lubricate the sleeve lock indexing levers and telescopic legs enough for ease in use. Clean and oil the mount with the same regularity and in the same manner as the gun.

- **Lubrications:** Use CLP to clean the machine gun. As its name implies, it cleans, lubricates, and preserves all in one application. After cleaning the gun with CLP, wipe it dry and reapply a thin coating. Allow this thin coat to dry on the parts for a short time before reassembly. CLP deposits a thin coating on the metal, which minimizes carbon buildup and prevents foreign material from sticking. The CLP coating provides the frictionless operation of the weapon parts, not liquid oil deposited on them. A gun treated with CLP will operate better and remain clean longer than one treated with any other cleaning material. Use of CLP will reduce maintenance costs and extend the life of the weapon. Rifle bore cleaner (RBC) is a cleaning solvent, which can be used to clean powder residue, carbon, and dirt from weapons. RBC does not preserve or lubricate a weapon. If you clean a weapon with RBC, dry the weapon and lubricate it with:

    - Lubricating oil semifluid (LSA)
    - Lubricating oil, special purpose (PL-S)
    - Lubricating oil, general purpose (PL-M)

The use of these oils will cause sand or grit to stick to the weapon.

NOTE: Use RBC and oil only when CLP is not available.

M2 .50 Caliber Machine Gun Care and Maintenance (Continued)

- **Inspection:** When you inspect the machine gun, it should be completely disassembled. Look for dirt, cracks, burrs, and rust.

The table below is an inspection checklist to for crewmembers or inspecting personnel to ensure that the gun and equipment are properly maintained.

Barrel	Be sure that the bore and chamber are: • Free of rust • Clean • Lightly oiled.
Moving parts	Be sure moving parts are clean and lightly oiled. • Operate the retracting slide handle and bolt latch release several times to see that the parts function without excessive friction.
Headspace and timing	Using the gauges, check to ensure that headspace and timing are correct.
Rear sight and windage knob	Be sure the sight: • Is in good condition • Clean • Free of grease or dirt • Lightly oiled • Elevation is set at 1000 • Windage is set at zero • The sight is down
Mount (M3, MK64, M36, or M4)	Be sure that the mount • Is clean and lightly lubricated • Is complete • Functions properly • Be sure all clamps are securely tightened
Spare parts and tools	Be sure spare parts are clean and lightly oiled Be sure spare parts kits are complete and in good condition. Requisition replacement parts. Examine newly drawn parts.
T&E	Be sure it is clean and lightly lubricated. Be sure both hand wheels work properly.
Ammunition	Be sure ammunition is properly stored. Ensure boxes and ammunition are in good condition and not oiled.

M2 .50 Caliber Machine Gun Headspace and Timing

Headspace is the distance between the face of the bolt and the base of the cartridge case, fully seated in the chamber.

Timing is the adjustment of the gun so that firing takes place when the recoiling parts are in the correct position for firing

Because the cartridge is held by the T-slot of the bolt, headspace with the M2 .50 caliber machine gun is measured as the distance between the rear of the barrel and the face of the bolt. This occurs when the recoiling parts are forward and there is positive contact between the breech lock recess in the bolt and the lock in the barrel extensions. Periodically check the calibration of the gauge; check the gauge at least annually.

> **WARNING: Firing a weapon that has improperly set headspace and timing could damage the machine gun or injure the gunner. Damage may also occur in the trunnion block, base of the barrel, or face of the bolt. This warning applies whether the gun is firing service ammunition or M1E1 blanks. (The weapon has improper early timing when two rounds are fired--and firing stops.)**

- **Gauges:** The headspace and timing gauge consists of a headspace gauge and two timing gauges (see diagram below) that provide an accurate means of checking the adjustment of headspace and timing.

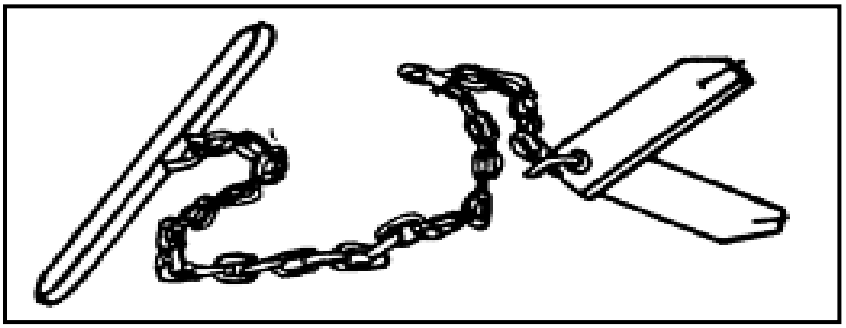

Headspace and Timing Gauge

- **Headspace**: Check and set headspace:
  - Before firing
  - After assembling the gun
  - After replacing the barrel or receiver group

M2 .50 Caliber Machine Gun Headspace and Timing (Continued)

Follow the steps in the table below to set headspace.

1	Raise the cover all the way up.
2	Grasp the retracting slide handle (see diagram below). 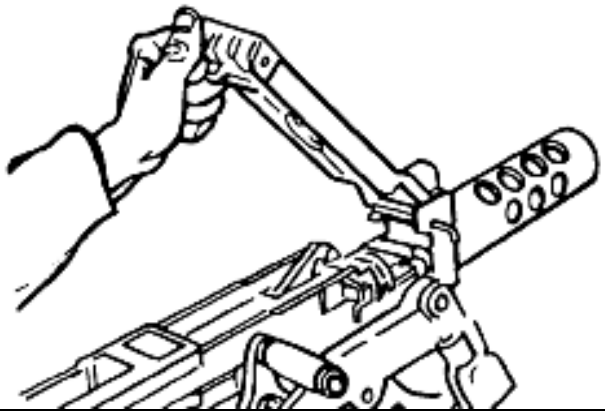
3	Using the retracting slide handle, retract the bolt until the barrel-locking-spring lug is centered in the 3/8-inch hole on the right side of the receiver directly under the feed tray (see diagram below). 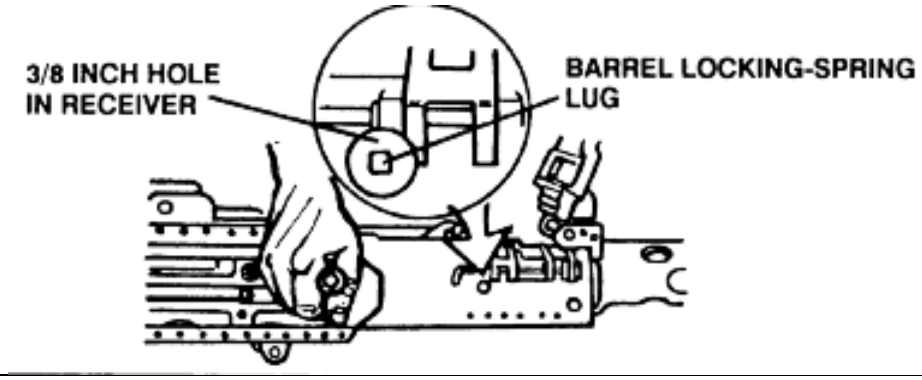

M2 .50 Caliber Machine Gun Headspace and Timing (Continued)

4	Hold the bolt in this position and screw the barrel fully into the barrel extension (see diagram below). **<u>WARNING</u>: When resetting the headspace and timing of a gun that has been fired, use an asbestos mitt to avoid burns.**
5	With the barrel-locking-spring lug centered in the 3/8-inch hole on the right side of the receiver, unscrew the barrel two notches (clicks). Release the retracting slide handle and allow the bolt to go forward. <u>NOTE</u>: At this point, check the barrel for rotation. Attempt to turn the barrel in either direction; the barrel should not turn. If the barrel does turn, stop and check barrel notches and the barrel locking spring for damage.
6	Pull the bolt to the rear with the retracting slide handle and hold, thus cocking the weapon. Otherwise, the headspace gauge will not fit.
7	Ensure retracting slide handle is in full forward position; depress bolt latch release to release the bolt.
8	Pull the bolt 1/16” to the rear and insert the no-fire gauge between the barrel extension and the trunnion block.

M2 .50 Caliber Machine Gun Headspace and Timing (Continued)

9	Raise the extractor out of the way to clear the top of the T-slot and try both ends of the go/no-go gauge (see diagram below). 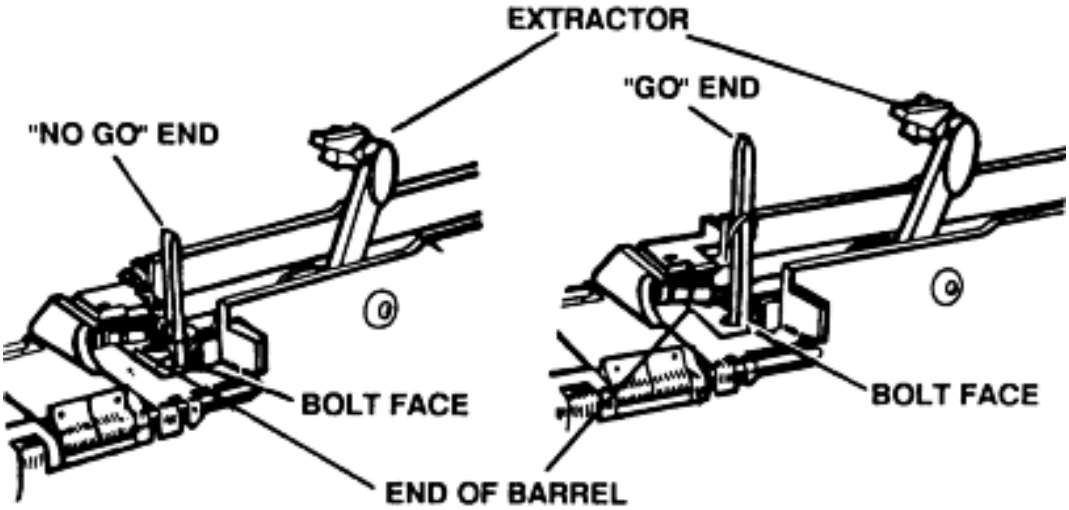
10	Insert the go end of the gauge between the face of the bolt and the end of the barrel all the way up to the ring. If the go end of the gauge • Enters the T-slot freely to the center ring of the gauge and the no-go end will not enter, headspace is correct. Remove gauge. Headspace setting is now complete. • Will not enter the T-slot freely, headspace is too tight. Continue with step 11.
11	Retract the bolt, so you can see the barrel-locking lug in the center of the 3/8th-inch alignment hole on the right side of the receiver.
12	Unscrew the barrel one notch (click).
13	Return the bolt fully forward.
14	Recheck headspace (step 10).
15	Repeat steps 10 through 13 until the go gauge fits but the no-go gauge does not fit. **NOTE**: You should not have to unscrew the barrel more than five notches (clicks) beyond the first setting of two clicks. If this condition does occur, turn in the machine gun to your unit armorer for inspection.
16	If the no-go end of the gauge enters the T-slot, headspace is too loose. Adjust it using the same procedures as above, screwing the barrel into the barrel extension rather than out.
17	Repeat steps 10 through 14, one click at a time, until the no-go gauge does not fit but the go gauge does fit.

M2 .50 Caliber Machine Gun Headspace and Timing (Continued)

- **Timing**: Timing is the adjustment of the weapon so that firing takes place when the recoiling parts are between .020 and .116 inch out of battery to prevent contact between the front end of the barrel extension and the trunnion block. Follow the steps in the table below to set timing.

WARNING: Be sure the gun is clear of ammunition before starting.

Step	Action
1	Check headspace first as previously described.
2	Pull the bolt to the rear with the retracting slide handle and release to cock the machine gun.
3	Grasp the retracting slide handle and retract the bolt just enough (1/16-inch) to insert the no-fire gauge between the barrel extension and the trunnion block. Release the retracting slide handle (see diagram below). NOTE: Insert the timing gauge with bevel against barrel notches. 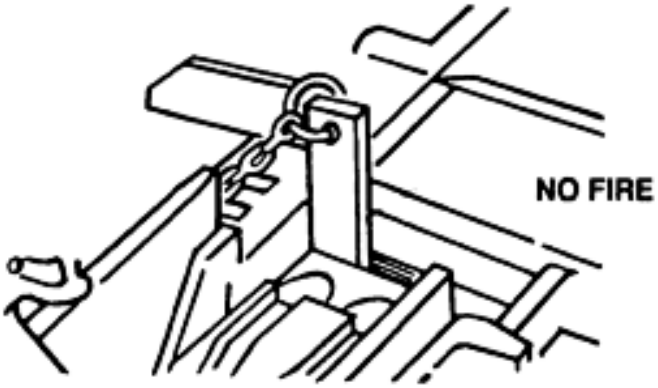
4	Depress the trigger; gun should not fire. **NOTE**: If the gun • Does not fire, go to step 5. • Does fire, you have early timing. Go to steps 7 through 14
5	Grasp the retracting slide handle and retract the bolt just enough to remove the no-fire gauge and insert the fire gauge in the same place (see diagram below). Release the retracting slide handle. 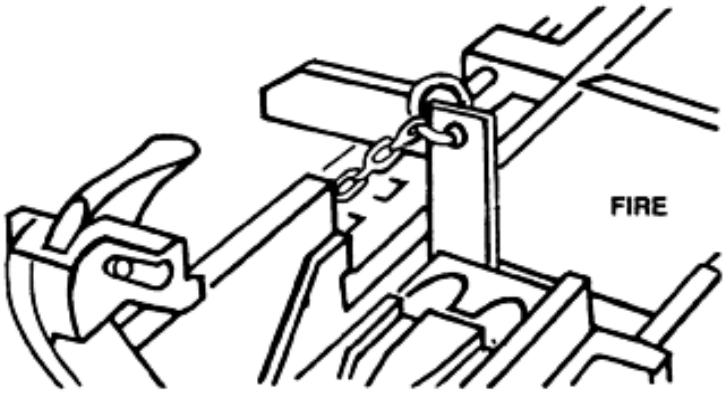

M2 .50 Caliber Machine Gun Headspace and Timing (Continued)

Step	Action
6	Depress the trigger; gun should fire. If it: • Does, timing adjustment is now complete. • Does not fire, you have late timing. Go to steps 7 through 14.
7	Remove the gauge, cock the gun, and return the bolt forward.
8	Insert the fire gauge.
9	Remove the backplate. **NOTE:** Weapon must be in single-shot mode to remove backplate. Always place the backplate on the ground with the spade handles down to avoid damaging the trigger mechanism.
10	Screw the timing adjustment nut all the way down until it touches the trigger lever (see diagram below). **NOTE:** The timing nut will come off the timing post if it is depressed too many clicks. If this happens, apply upward pressure to the timing nut while screwing it back on to the timing post. 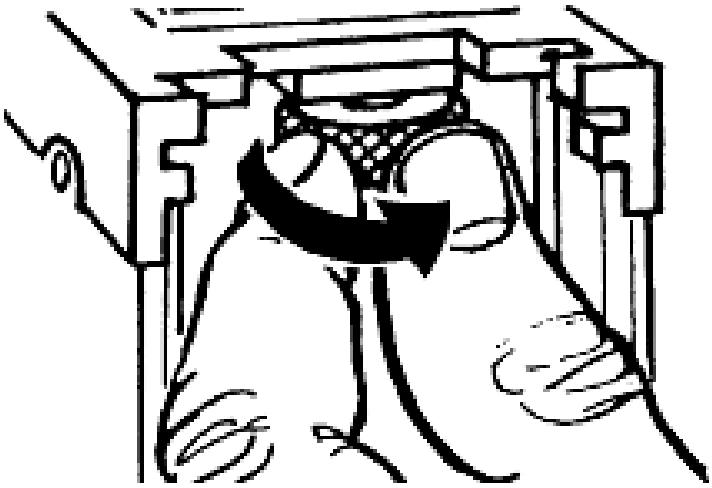 **WARNING: Never cock the gun or insert the gauge with the backplate off.**
11	Put back plate back on and attempt to fire. The weapon should not fire and remove back plate.
12	Screw the timing adjustment nut up (to the right) one click at a time. Push the trigger after each click. Keep doing this until the gun fires. **NOTE**: You must apply firm pressure to the trigger lever.
13	Turn the timing adjustment nut an additional two clicks to compensate for heat expansion.
14	Replace the backplate, remove the gauge, and cock the machine gun.
15	Repeat steps 3 through 6 to ensure timing is set correctly.

M2 .50 Caliber Machine Gun Cycle of Operations

The cycle of operations is consists of these basic steps:

- Feeding - The act of placing a cartridge in the receiver, approximately in back of the barrel, ready for chambering.
- Chambering - Placing the cartridge into the chamber of the weapon.
- Locking - The bolt is locked to the barrel and barrel extension.
- Firing - The firing pin is released, igniting the primer of the cartridge.
- Unlocking - The bolt is unlocked from the barrel and barrel extension.
- Extracting - The empty cartridge case is pulled from the chamber.
- Ejecting - The empty cartridge case is expelled from the receiver.
- Cocking - The firing pin is withdrawn into the cocked position.

Some of these steps may occur at the same time.

- **Feeding**: When the bolt is fully forward and the top is closed, the belt-holding pawl holds the ammunition belt in the feed-way (see diagram below).

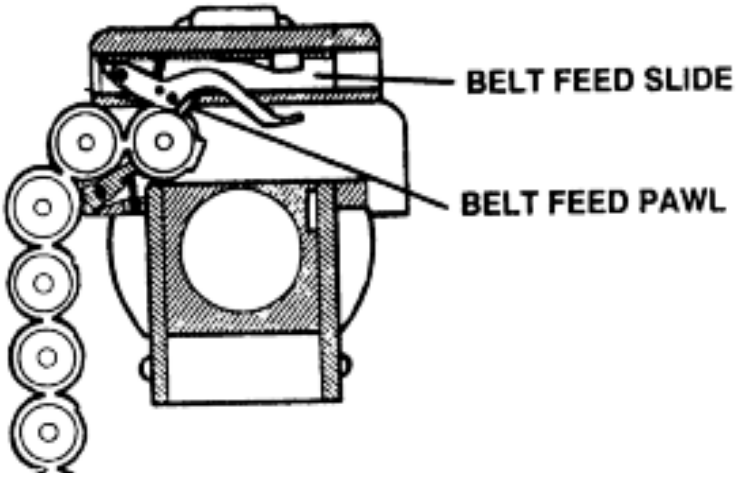

M2 .50 Caliber Machine Gun Cycle of Operations (Continued)

As the bolt is moved to the rear, the belt-holding pawl moves the belted ammunition over and then holds it in a stationary position. At the same time, the belt-feed pawl rides up and over the link, holding the first round in place. When the bolt is all the way to the rear, the belt-feed slide moves out far enough to allow the belt-feed pawl spring to force the pawl up between the first and second rounds (see diagram below).

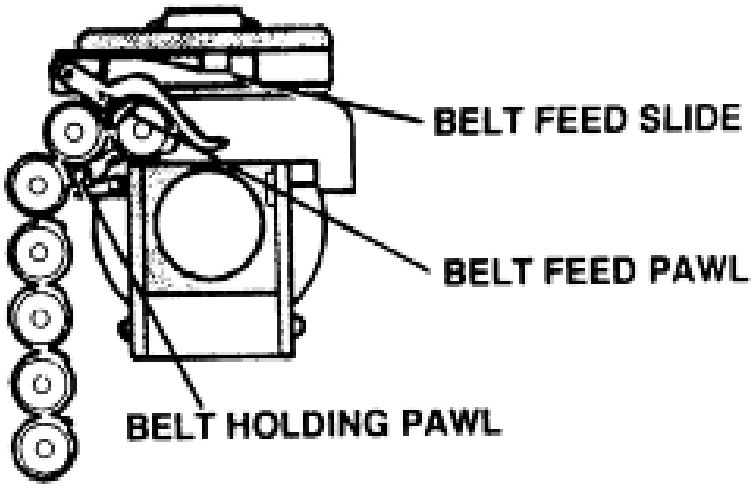

As the bolt moves forward, the belt-feed slide is moved back into the receiver, pulling with it the next linked cartridge. When the bolt reaches the fully forward position, the belt-holding pawl will snap into place behind the second linked cartridge (see diagram below), holding it in place.

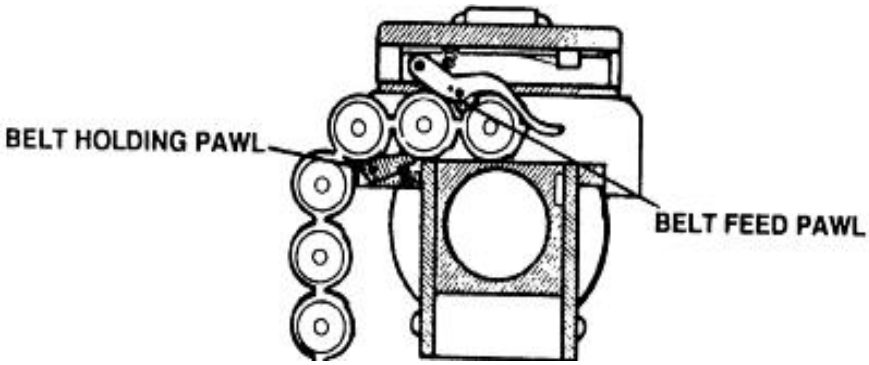

M2 .50 Caliber Machine Gun Cycle of Operations (Continued)

The extractor will then grasp the rim of the first cartridge, preparing to release it from the belt on the next rearward motion (see diagram below).

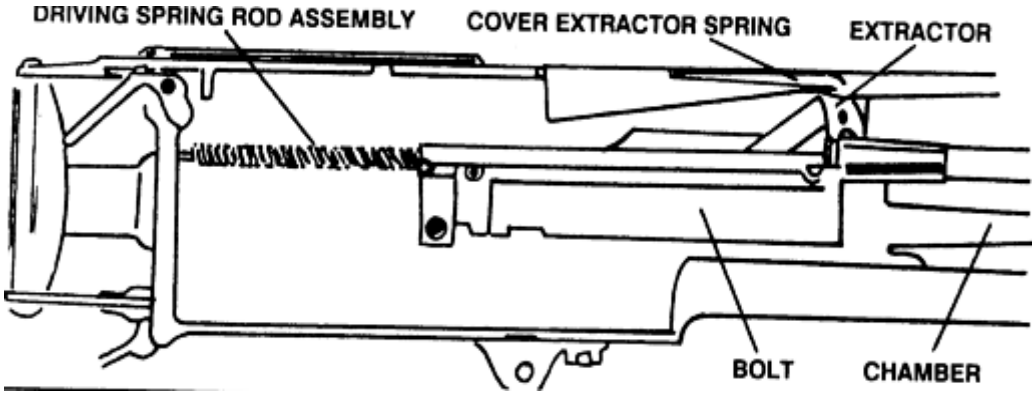

As the bolt then moves to the rear, the extractor will pull the cartridge with it, releasing it from the belt. As the extractor moves to the rear, the extractor cam forces it down, causing the cartridge to be moved into the T-slot in the bolt face, preparing the cartridge to be chambered (see diagram below). The extractor is connected under the extractor switch on the side of the receiver until the forward movement of the bolt repositions it, and pressure of the cover extractor spring forces it over the next round.

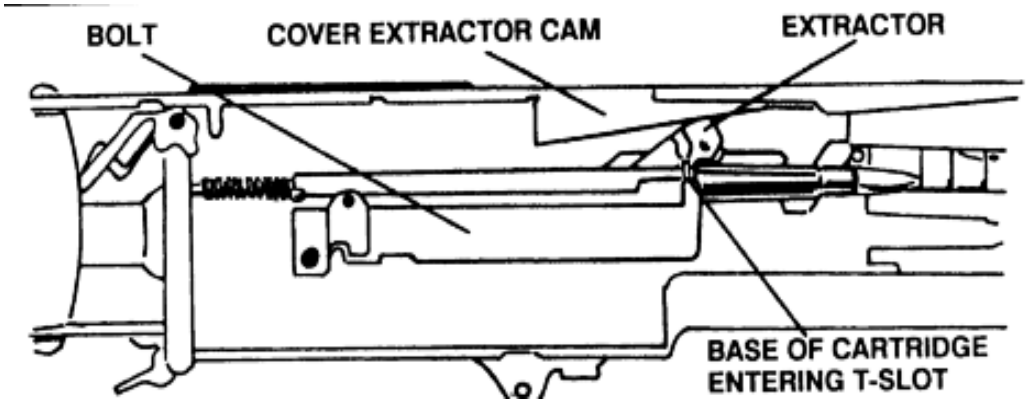

M2 .50 Caliber Machine Gun Cycle of Operations (Continued)

- **Chambering:** (See diagram below.) During this cycle, the bolt moves forward, carrying the cartridge in the T-slot in a direct route to the chamber of the weapon. At the same time, the extractor rides up the extractor cam and when the bolt is fully forward, the extractor grasps the next linked cartridge.

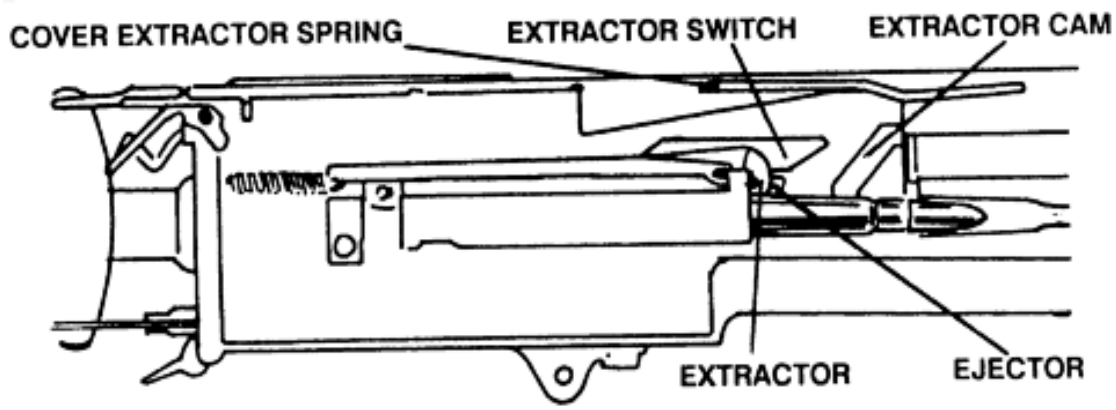

Chambering

- **Locking:**

  Initially, the energy stored in the driving spring assembly and the compressed buffer disks forces the bolt forward in counter-recoil. At the start of counter-recoil, the barrel buffer body tube lock keeps the accelerator tips from bounding up too soon and catching in the breech lock recess in the bolt. After the bolt travels forward about 5 inches, the lower rear projection of the bolt strikes the tips of the accelerator, turning the accelerator forward. This unlocks the barrel extension from the barrel buffer body group and releases the barrel buffer spring. The barrel buffer spring expands, forcing the piston rod forward.

  Since the cross groove in the piston rod engages the notch on the barrel extension shank, the action of the barrel buffer spring also forces the barrel extension and barrel forward. Some of the forward motion of the bolt is transmitted to the barrel extension through the accelerator. As the accelerator rotates forward, the front of the accelerator speeds up the barrel extension; at the same time, the accelerator tips slow down the bolt.

  Locking begins 1 1/8 inches before the recoiling groups (bolt, barrel extension, and barrel) are fully forward. The breech lock in the barrel extension rides up the breech lock cam in the bottom of the receiver into the breech lock recess in the bottom of the bolt, locking the recoiling groups together. The recoiling groups are completely locked together three-fourths of an inch before the groups are fully forward (see diagram on the next page).

M2 .50 Caliber Machine Gun Cycle of Operations (Continued)

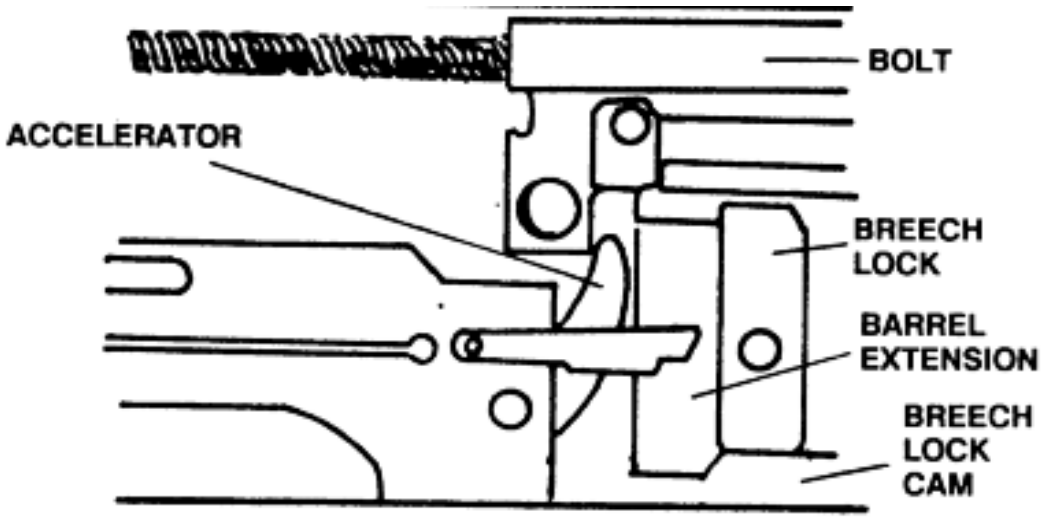

Locking

Firing: (See diagrams below and on next page.) As the trigger is pressed down, it pivots on the trigger pin so that the trigger cam on the inside of the backplate engages and raises the rear end of the trigger lever. This in turn pivots on the trigger lever pin assembly, causing the front end of the trigger lever to press down on the top of the sear stud. The sear is forced down until the hooked notch of the firing pin extension is disengaged from the sear notch. The firing pin spring drives the firing pin and firing pin extension forward; the striker of the firing pin hits the primer of the cartridge, firing the round.

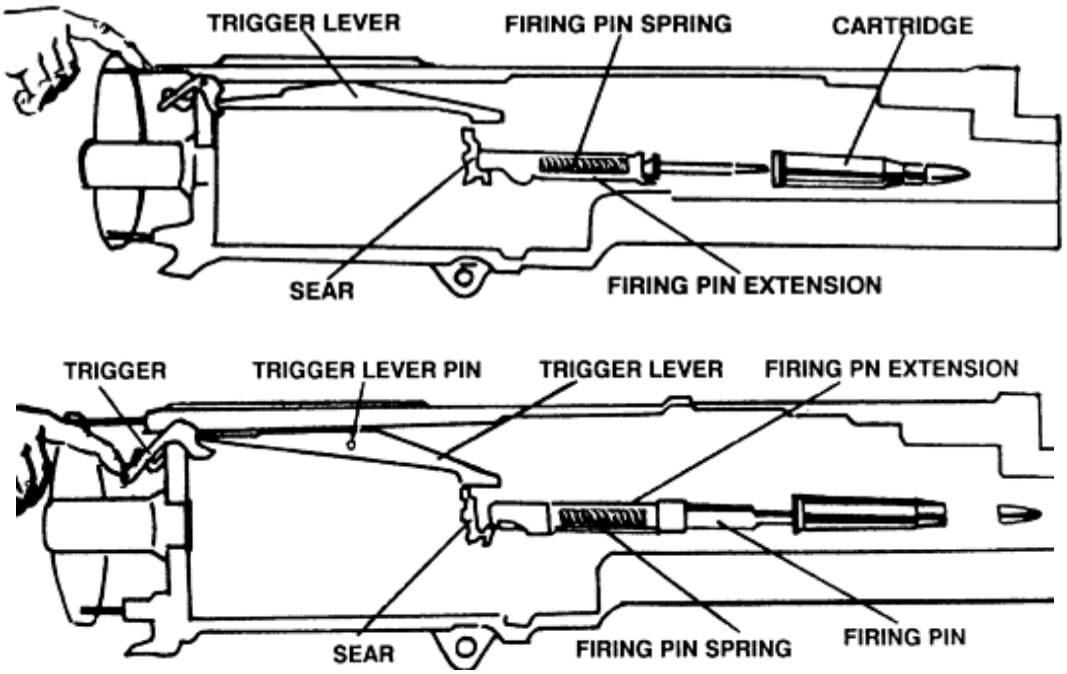

Firing

M2 .50 Caliber Machine Gun Cycle of Operations (Continued)

For automatic firing, the bolt-latch release must be locked or held depressed so that the bolt latch will not engage the notches in top of the bolt, holding the bolt to the rear as in single-shot firing. The trigger is pressed and held down. Each time the bolt travels forward in counter-recoil; the trigger lever depresses the sear, releasing the firing pin extension assembly and the firing pin. This automatically fires the next round when the forward movement of the recoiling groups is nearly completed. The gun should fire about one-sixteenth of an inch before the recoiling groups are fully forward. Only the first round should be fired with the parts fully forward. The gun fires automatically as long as the trigger and bolt latch are held down and ammunition is fed into the gun.

Unlocking: (See diagram on the next page.) At the instant of firing, the breech lock, which is on top of the breech lock cam and in the breech lock recess in the bottom of the bolt, locks the bolt to the barrel extension and against the rear end of the barrel.

When the cartridge explodes, the bullet travels out of the barrel; the force of recoil drives the recoiling groups rearward. During the first three-fourths of an inch, the recoiling groups are locked together. As this movement takes place, the breech lock is moved off the breech lock cam stop, allowing the breech lock depressors (acting on the breech lock pin) to force the breech lock down, out of its recess from the bottom of the bolt. At the end of the first three-fourths of an inch of recoil, the bolt is unlocked, free to move to the rear independent of the barrel and barrel extension.

As the recoiling groups move to the rear, the barrel extension causes the tips of the accelerator to rotate rearward. The accelerator tips strike the lower rear projection of the bolt, accelerating the movement of the bolt to the rear. The barrel and barrel extension continue to travel to the rear an additional three-eighths of an inch—approximately a total distance of 1 1/8 inches—until the barrel buffer assembly stops them (see diagram below).

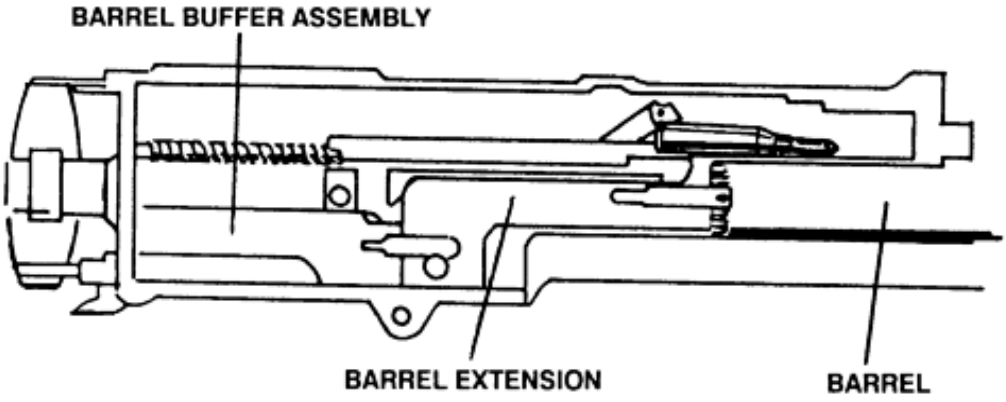

Unlocking

M2 .50 Caliber Machine Gun Cycle of Operations (Continued)

During the recoil of 1 1/8 inches, the barrel extension shank compresses the barrel buffer spring, since the notch on the shank is engaged in the cross groove in the piston rod head. The claws of the accelerator, which engage the shoulders of the barrel extension shank, lock the spring in the compressed position. After its initial travel of three-fourths of an inch, the bolt travels an additional 6 3/8 inches to the rear, after it is unlocked from the barrel and barrel extension, for a total of 7 1/8 inches. During this movement, the driving springs are compressed. The rearward movement of the bolt is stopped as the bolt strikes the buffer plate. The driving spring rod assembly stores part of the recoil energy of the bolt, and the buffer disks in the backplate absorbs part of it (see diagram below).

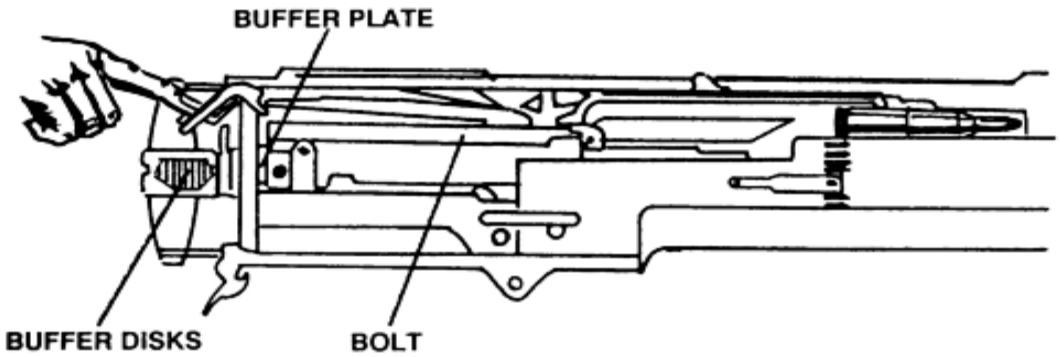

Unlocking

Extracting: The force of the explosion has expanded the empty case, which is held by the T-slot; therefore, it fits snugly in the chamber. If the case is withdrawn from the chamber too rapidly, it may be torn. To prevent this, and to ensure slow initial extraction of the case, the top forward edge of the breech lock and the forward edge of the lock recess in the bolt are beveled. As the breech lock is unlocked, the initial movement of the bolt away from the barrel and barrel extension is gradual. The slope of the locking faces facilitates locking and unlocking and prevents sticking. The leverage of the accelerator tips on the bolt speeds extraction after it is started by kicking the bolt to the rear to extract the empty case from the chamber.

Ejecting: As the bolt starts its forward movement (counter-recoil), the extractor lug rides below the extractor switch, forcing the extractor assembly farther down until the round is in the center of the T-slot of the bolt. The round, still gripped by the extractor, ejects the empty case from the T-slot. The ejector pushes the last empty case of an ammunition belt out.

M2 .50 Caliber Machine Gun Cycle of Operations (Continued)

Cocking: When the recoiling groups are fully forward, the top of the cocking lever rests on the rear half of the V-slot in the top plate bracket. As the bolt moves to the rear, the top of the cocking lever is forced forward. The lower end pivots to the rear on the cocking lever pin. The rounded nose of the cocking lever, which fits through the slot in the firing pin extension, forces the extension to the rear, compressing the firing pin spring against the sear stop pin (accelerator stop). As the firing pin extension is pressed to the rear, the hooked notch of the extension rides over the sear notch, forcing the sear down. The sear spring forces the sear back up after the hooked notch of the firing pin extension has entered the sear notch. The pressure of the sear and firing pin springs holds the two notches locked together. The firing pin extension slightly over travels in its movement to the rear to ensure proper engagement with the sear. As the bolt starts forward, the overtravel is taken up and completed when the cocking lever enters the V-slot of the top plate bracket and is caromed toward the rear. Pressure on the cocking lever is relieved as the bolt starts forward.

M2 .50 Caliber Machine Gun Mounts and Accessories

- **Tripod Mount, M3:** The M3 mount is the standard ground mount of the M2 HB machine gun (see diagram below). The M3 mount is a folding tripod with three, telescopic, tubular legs connected at the tripod head.

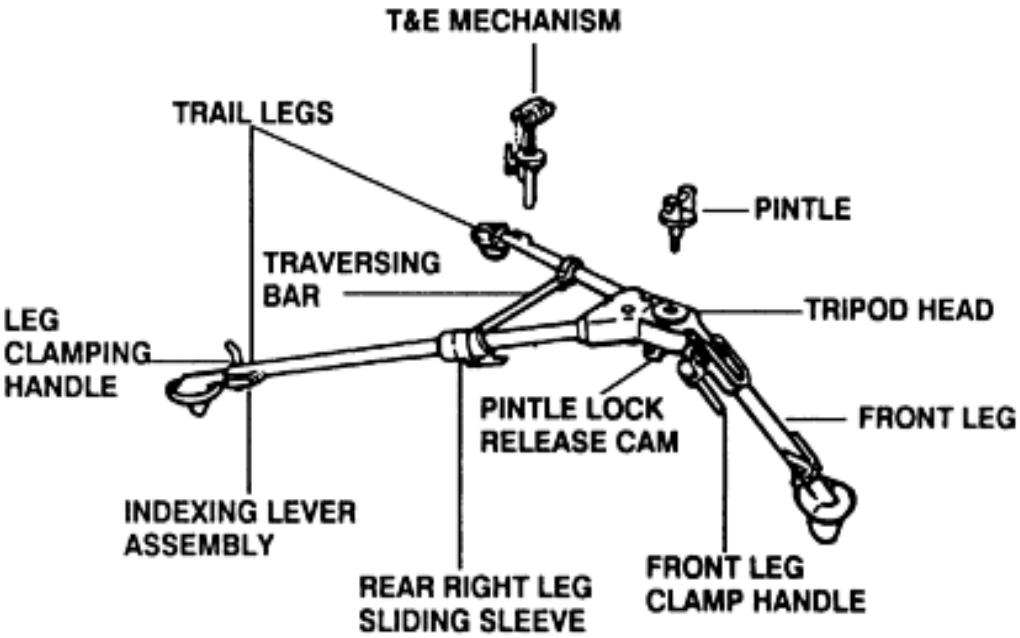

Tripod Mount M3

Each leg ends in a metal shoe that can be stamped into the ground for greater stability. The two trail legs are joined together by the traversing bar. The traversing bar serves as a support for the traversing and elevating mechanism, which in turn supports the rear of the gun. The tripod head furnishes a front support for the mounted gun that is further supported by the short front leg.

When the tripod is emplaced on flat terrain with all extensions closed, the adjustable front leg should form an angle of about 60 degrees with the ground. This places the gun on a low mount about 12 inches above the ground.

To raise the tripod farther off the ground, extend the telescopic front and trail legs enough to keep the tripod level and maintain the stability of the mount.

To set the tripod trail legs:

1. Unscrew the leg-clamping handle, press down on the indexing lever, and extend the leg to the desired length.
2. Align the indexing lever stud with one of the holes in the tripod leg extension.
3. Release the pressure on the indexing lever, allowing the stud to fit the desired hole.
4. Tighten the leg-clamping handle.

M2 .50 Caliber Machine Gun Mounts and Accessories (Continued)

To set the front leg of the tripod:

1. Turn the front leg clamp handle counterclockwise to loosen the front leg.
2. Adjust the leg to the desired angle.
3. Tighten the front leg clamp.

To secure the tripod legs:

1. Stamp the metal shoe on each tripod leg into the ground
2. Sandbag each leg to stabilize the M2 for firing.

Traversing and Elevating (T&E) Mechanism: The T&E mechanism (see diagram below) is used to engage preselected target areas at night or during limited visibility conditions. Record direction and elevation readings from the traversing bar and T&E mechanism. Record all readings in mils.

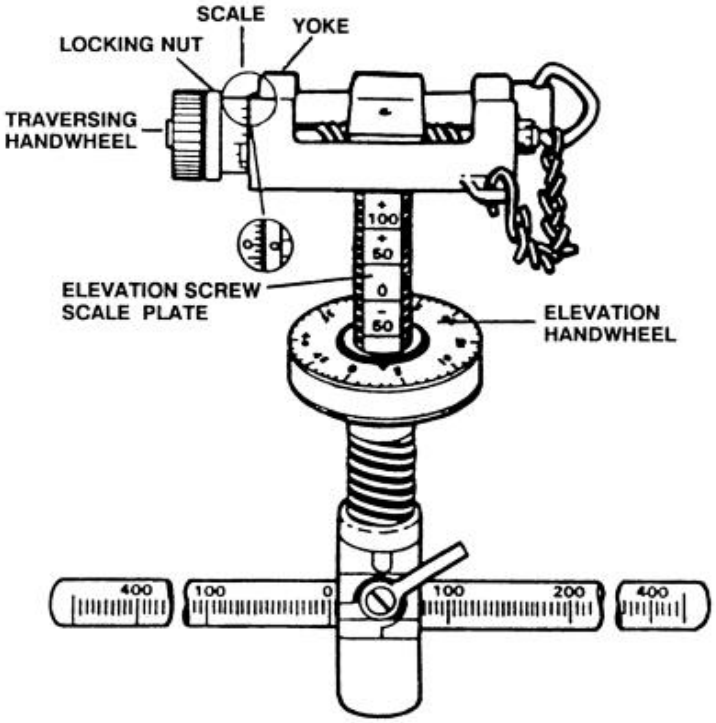

Traversing and Elevating (T&E) Mechanism

The traversing mechanism consists of a

- Traversing bar
- Slide
- Screw assembly

M2 .50 Caliber Machine Gun Mounts and Accessories (Continued)

The traversing bar, graduated in 5-mil increments, fits between the trail legs of the tripod. The traversing slide lock lever clamps the traversing slide and screw assembly in place on the traversing bar. When the traversing slide is locked to the traversing bar, the traversing handwheel should be centered. The traversing slide is properly mounted when the

- Lock lever is to the rear
- Traversing handwheel is positioned to the left

To make changes in direction, loosen the traversing slide lock lever and move the slide along the traversing bar; this permits traverse of 400 mils left or right of the zero index in the center of the traversing bar. Readings on the traversing bar are taken from the left side of the traversing slide.

For changes of 50 mils or less in deflection, turn the traversing handwheel of the screw assembly; this allows a traverse of 50 mils left or right of center. One click in the traversing handwheel signifies 1 mil change in direction.

The elevating mechanism consists of an upper and lower elevating screw. The elevating mechanism is connected to the gun by inserting the quick release pin assembly through the holes in the upper elevating screw yoke and the rear mounting lugs of the receiver. A scale, graduated in mils, is fitted to the upper screw to indicate elevation. This scale is marked to show 250 mils in depression and 100 mils in elevation from the zero setting.

The elevating handwheel is graduated in l-mil increments up to 50 mils and is fastened to the elevating screw by a screw lock. This synchronizes the handwheel graduations with those on the upper elevating screw. A spring-actuated index device produces a clicking sound when the handwheel is turned. Each click equals 1 mil change in elevation. The handwheel is turned

- Clockwise to depress the barrel
- Counterclockwise to elevate the barrel

M2 .50 Caliber Machine Gun Mounts and Accessories (Continued)

Pintle: A pintle (see diagram on the next page) connects the gun to the tripod mount, M3. A pintle bolt through the front mounting hole in the receiver semipermanently attaches the pintle to the machine gun. The tapered stem of the pintle seats in the tripod head; a pintle lock and spring holds it securely. To release the pintle, raise the pintle lock, thus releasing the cam.

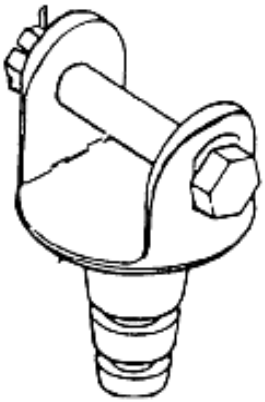

Pintle

The weight of the pintle and traversing and elevating mechanism are considered as part of the total weight of the tripod mount, M3 (44 pounds).

Truck Mount, M36: The truck mount, M36 (see diagram below) consists of a cradle with a roller carriage on a circular track. The cradle can be

- Rotated in the pintle sleeve of the carriage
- Adjusted for elevation

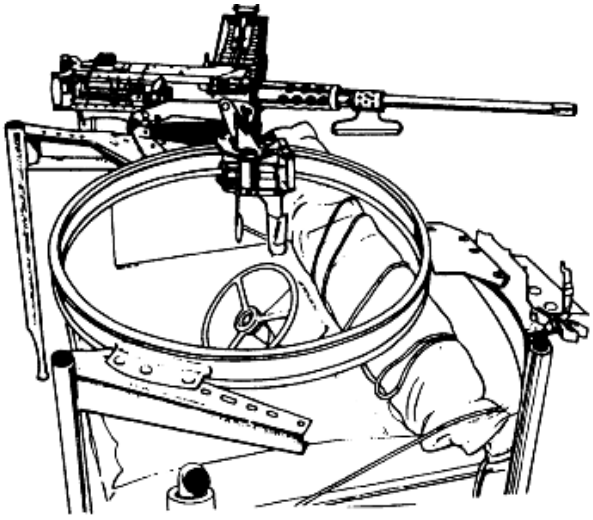

Truck Mount, M36

The carriage is guided on the track by rollers. The track is secured to the vehicle by supports.

M2 .50 Caliber Machine Gun Mounts and Accessories (Continued)

To move the gun in elevation on the M36 mount:

- Remove the cradle locking pin and place it in the carriage handle
- Grasp the spade grips and elevate or depress as desired

The gun is also moved in traverse by pressure on the spade grips.

To move the gun on the track, raise the brake handle lever until the brake detent plungers retain it. Then you may move the cradle on the track by applying pressure on the carriage handle.

MK64 Gun Cradle Mount: The MK64 gun cradle mount (see diagram below) is a vehicle mount primarily designed for the M2. However, because of its versatility, the MK64 will accept the MK19 also (using the M2 mounting adapter assembly). The MK64 is used when mounting the gun on a HMMWV.

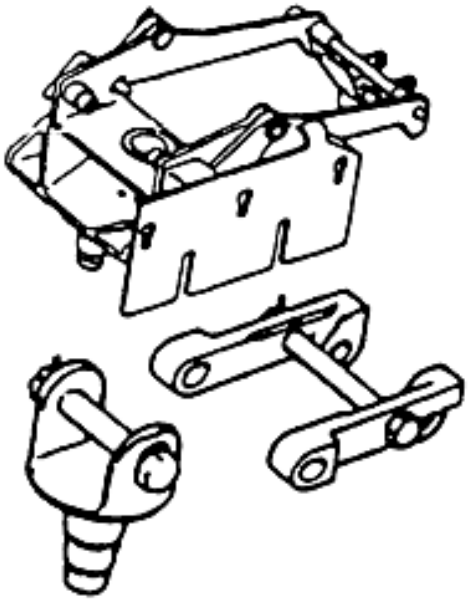

MK64 Gun Cradle Mount

M2 .50 Caliber Machine Gun Review Questions

Short Answer: Write your answer in the space provided.

1. What must you do before you disassemble the M2?

_____

2. What is the sustained rate of fire for the M2?

_____

3. What is condition 1 for the M2?

_____

4. In what position should the bolt be to unscrew the barrel?

_____

5. What is condition 3 for the M2?

_____

6. When checking headspace and timing, what must be done first?

_____

7. When checking timing, which gauge is used first?

_____

8. Must the M2 be cocked to check timing?

_____

9. If you have a failure to fire, how can you prevent a cook off from occurring?

_____

M2 .50 Caliber Machine Gun Review Questions (Continued)

10. If a stoppage occurs and the barrel is hot and a round cannot be extracted within 10 seconds, how long must the round remain locked in the chamber?

_____

11. How many mils of traverse are there on the traversing bar?

_____

12. Which tripod is used with the M2?

_____

13. What is the maximum effective range of the M2?

_____

Matching: For questions 14 through 21, use the illustration below to identify parts of the M2 .50 caliber machine gun.

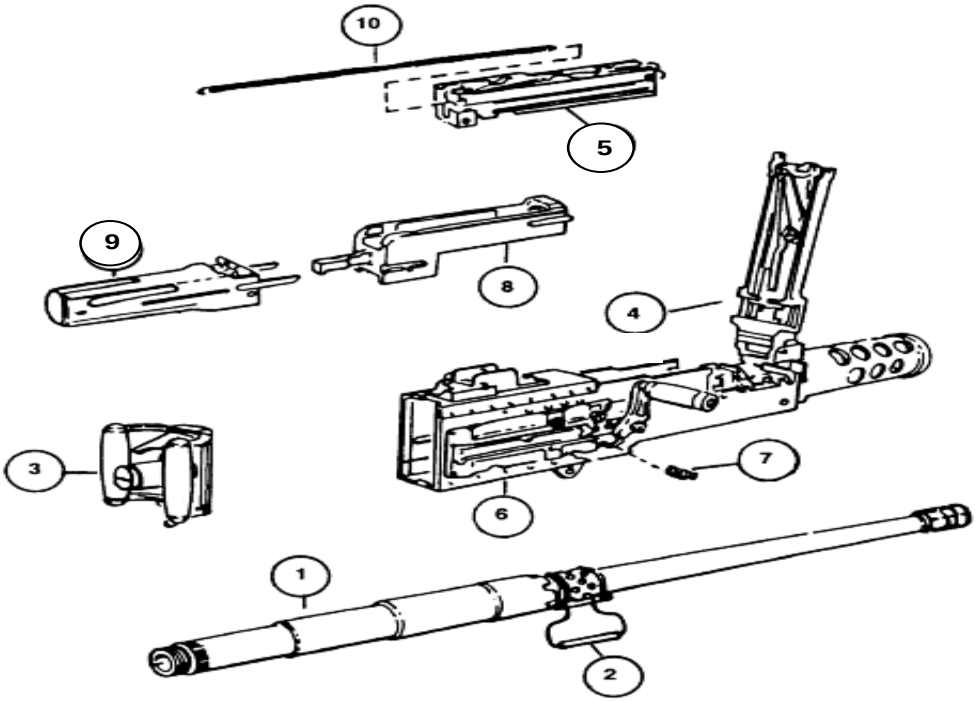

M2 .50 Caliber Machine Gun Review Questions (Continued)

14. Which part is the barrel group?

_____

15. Which part is the bolt stud?

_____

16. Which part is the backplate group?

_____

17. Which part is the receiver group?

_____

18. Which part is the bolt group?

_____

19. Which part is the barrel buffer body?

_____

20. Which part is the barrel extension?

_____

21. Which part is the cover group?

_____

True or False:

22. It is okay to allow the bolt to slam forward when the barrel is out of the gun. **True / False**

23. The M2 must be cocked in order to check headspace. **True / False**

24. If the no-go end of the headspace gauge enters the T-slot, headspace is too tight. **True / False**

25. The cover should never be closed with the bolt to the rear. **True / False**

M2 .50 Caliber Machine Gun Review Answers

1. What must you do before you disassemble the M2? **Clear the weapon**.

2. What is the sustained rate of fire for the M2? **Less than 40 rpm.**

3. What is condition 1 for the M2? **Rounds inserted all the way to the cartridge stop, bolt forward, round in the chamber, weapon on automatic.**

4. In what position should the bolt be to unscrew the barrel? **Retracted until the barrel-locking-spring lug is centered in the 3/8-inch hole on the right side of the receiver.**

5. What is condition 3 for the M2? **Rounds inserted to the cartridge stop, bolt forward on an empty chamber**.

6. When checking headspace and timing, what must be done first? **Headspace**

7. When checking timing, which gauge is used first? **No fire**

8. Must the M2 be cocked to check timing? **Yes**

9. If you have a failure to fire, how can you prevent a cook off from occurring? **By applying immediate action within 10 seconds.**

10. If a stoppage occurs and the barrel is hot and a round cannot be extracted within 10 seconds, how long must the round remain locked in the chamber? **Five minutes**

11. How many mils of traverse are there on the traversing bar? **800**

12. Which tripod is used with the M2? **M3**

13. What is the maximum effective range of the M2? **1830 meters**

M2 .50 Caliber Machine Gun Review Answers (Continued)

Matching: For questions 14 through 21, use the illustration below to identify parts of the M2 .50 caliber machine gun.

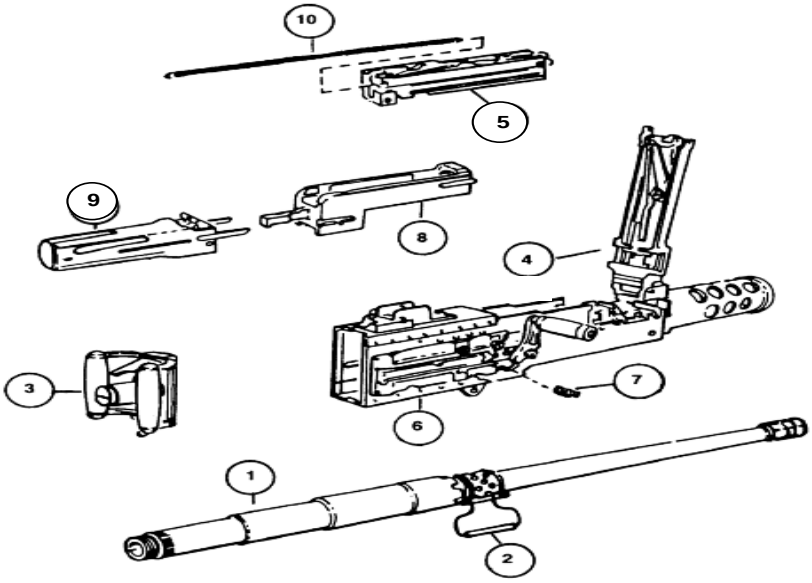

14. Which part is the barrel group? **1**
15. Which part is the bolt stud? **7**
16. Which part is the backplate group? **3**
17. Which part is the receiver group? **6**
18. Which part is the bolt group? **5**
19. Which part is the barrel buffer body? **9**
20. Which part is the barrel extension? **8**
21. Which part is the cover group? **4**

True or False:

22. It is okay to allow the bolt to slam forward when the barrel is out of the gun? **False**

23. The M2 must be cocked in order to check headspace. **True**

24. If the no-go end of the headspace gauge enters the T-slot, headspace is too tight. **False**

25. The cover should never be closed with the bolt to the rear. **True**

MK-19 MOD 3 Automatic Grenade Launcher

Development of the MK-19 began in 1963. The first version was a hand-cranked multiple grenade launcher called the MK-18. In 1966, the need for more firepower inspired the development of a self-powered 40-mm machine gun called the MK-19 MOD 0. This model was neither reliable enough nor safe enough for use as a military gun. Product improvements begun in 1971 resulted in the 1972 MOD 1, of which only six were produced. The MOD 1 performed effectively in Navy riverine patrol craft, and broader applications for the MK-19 were found. In 1973, the Navy developed the MOD 2, which featured improved reliability, safety, and maintainability. In 1976, a complete redesign resulted in the MK-19 MOD 3 (see diagram below).

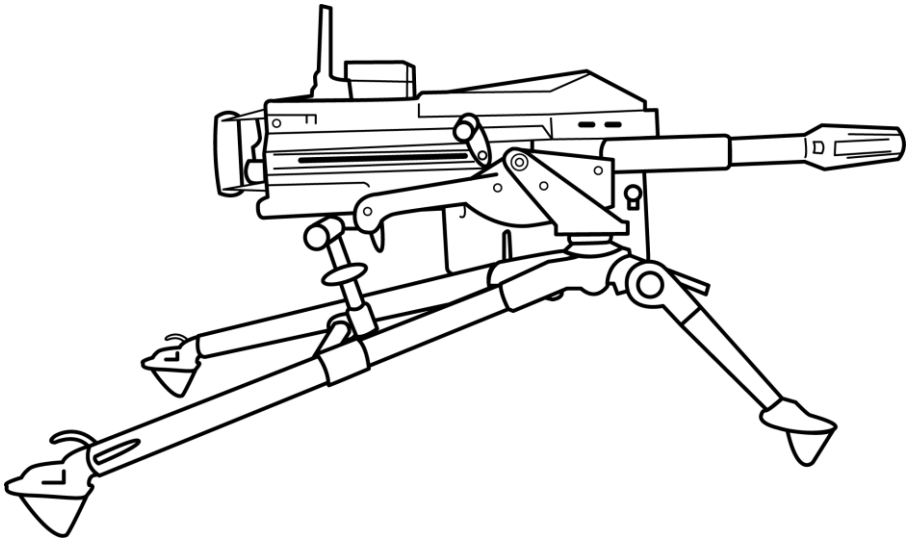

MK-19 MOD 3

MK-19 MOD 3 Automatic Grenade Launcher Capabilities/Limitations

Description: The MK-19 is a belt-fed, air-cooled, blowback-operated, crew-served, fully automatic 40 mm grenade launcher. Six of these machineguns are in each heavy machine gun platoon of the Weapons Company. They are divided into two gun sections.

The table below lists the characteristics for the MK-19.

Gun	75.6 pounds
Cradle (MK64 MOD 5)	21 pounds
Tripod	44 pounds
Total System Weight	140.6 pounds
Length	43.1 inches
Rifling	• Right-hand, uniform twist • One turn in 48 inches

The table below lists the velocity, rates of fire and ranges for the MK-19.

Muzzle Velocity	790 feet per second
Rate of Fire	
Sustained	40 rounds per minute (3- to 5-round burst)
Rapid	60 rounds per minute
Cyclic	325 to 375 rounds per minute
Range	
Maximum	2212 meters
Maximum effective (area target)	2212 meters
Maximum effective (point target)	1500 meters
Minimum safe distance (training)	310 meters
Minimum safe distance (combat)	75 meters

MK-19 MOD 3 Automatic Grenade Launcher Ammunition

The table below describes the ammunition (see diagram below) for the MK-19.

Ammunition	Description
High-explosive, dual-purpose (HEDP) M430/M430A1	• Joined with M16A2 links • Is standard round for Mk19 • Is impact-type round • Penetrates 2 inches of steel armor at 0 degree obliquity • Has a PIBD, M549 fuze and Comp B filler • Arms between 18 to 40 meters • Inflicts personnel casualties in the target area • Has a casualty radius of 15 meters • M430 rounds are linked in a 48-round M548 ammunition container • M430A1 rounds are linked in a 32-round container • DODIC B542 • Is olive drab with a yellow ogive and yellow markings
High-explosive (HE)	• Two types whose fillers and body materials differ, but performance traits are same o HE M383 or M383E1: linked with M16A2 links, DODIC B571 o HE M384: Linked with M16A2 links, DODIC B470 • Inflicts personnel casualties in the target area with ground burst effects • Doesn't have armor penetrating ability of the HEDP M430 round • Round is packed in an M548 ammunition container (48 rounds linked in each container)
Training practice	• M385A1 o Joined with M16A1 or M16A2 links o Consists of a one-piece solid inert aluminum projectile body o Packed the same as HEDP rounds, 48 rounds to a box o DODIC B576 o Is blue with black markings • M918 o Joined with M16A1 or M16A2 links o Is a fixed round of ammunition consisting of a one-piece steel projectile body which is fitted to a cartridge case assembly o Aluminum ogive contains a firing pin plate assembly and an aluminum insert that contains the flash charge o Contains one gram of flash charge composition o Is packed the same as the HEDP rounds, 48 rounds to a box o DODIC B584 o Is blue with black markings, brown band, and blue ogive

MK-19 MOD 3 Automatic Grenade Launcher Ammunition (Continued)

M922 Dummy	• Joined with M16A2 links • Used to check weapon function and for crew training • Each MK19 is allowed one 10-round belt, which is packed in an M2A1 metal box • DODIC B472 • Is gold with black markings

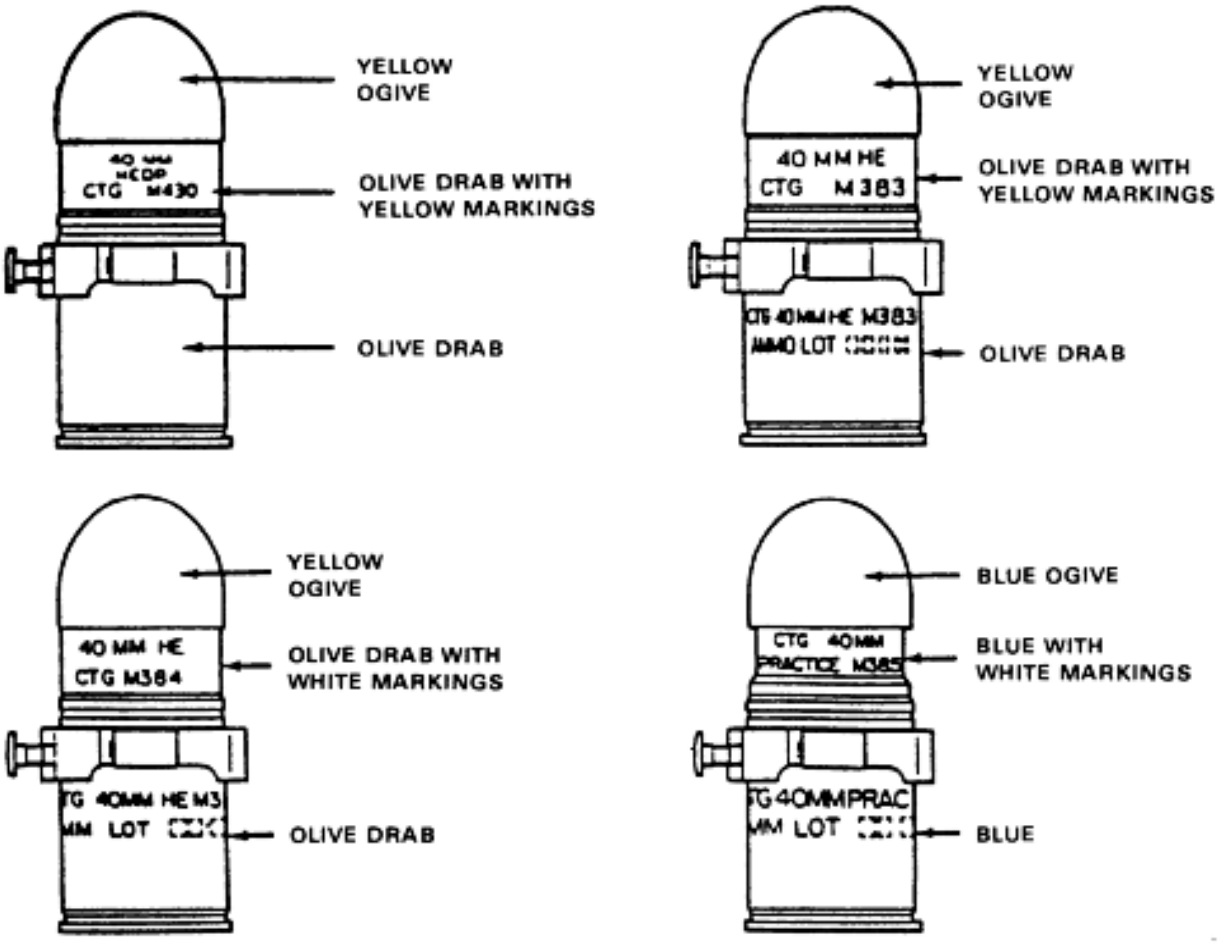

DUMMY ROUNDS—10-ROUND BELT, LINKED

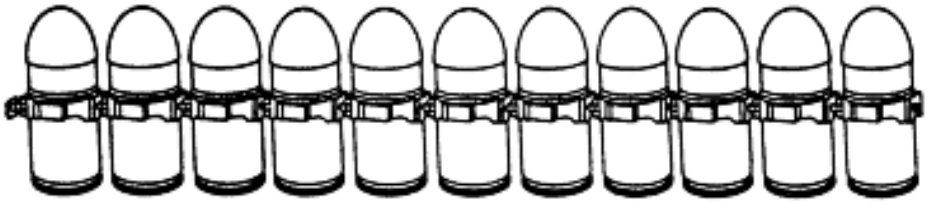

MK-19 Ammunition

MK-19 MOD 3 Automatic Grenade Launcher Nomenclature

The major components of the MK-19 are shown in the diagram below:

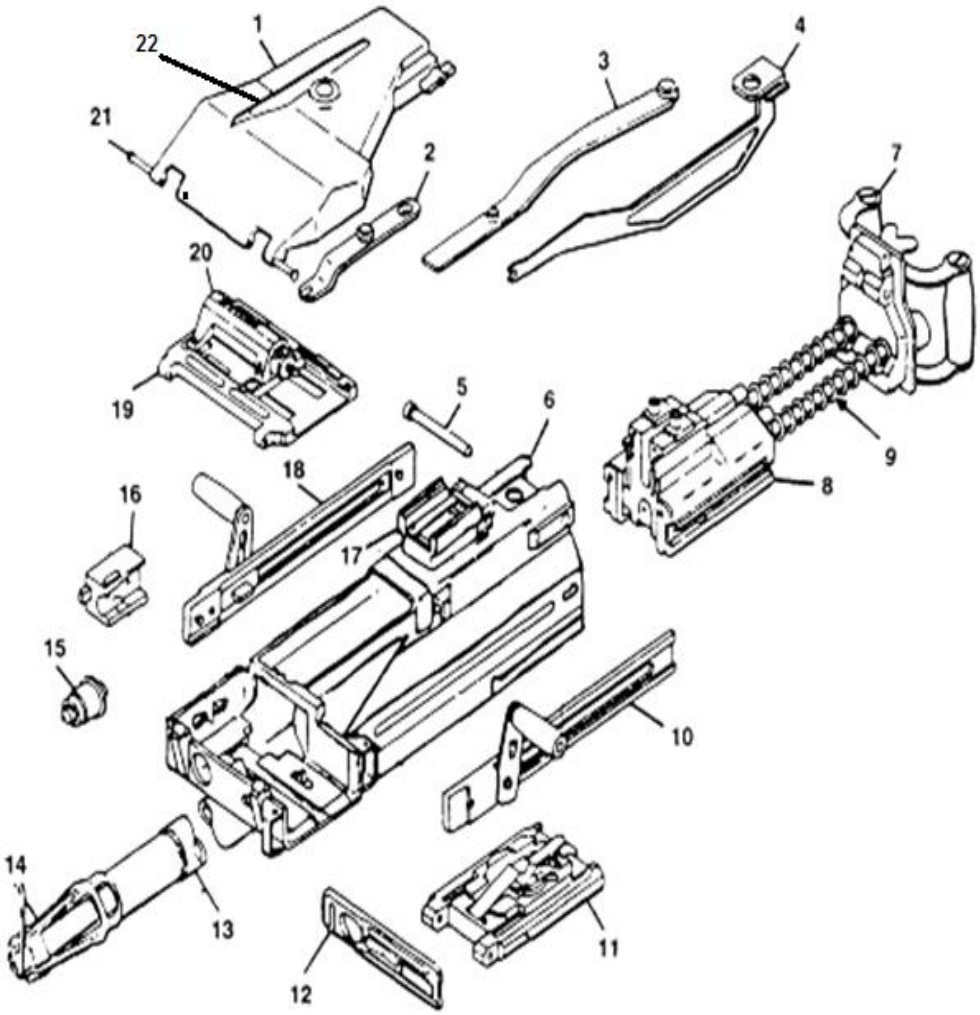

1. TOP COVER ASSEMBLY.
2. SECONDARY DRIVE LEVER ASSEMBLY.
3. PRIMARY DRIVE LEVER.
4. VERTICAL CAM ASSEMBLY.
5. BACKPLATE PIN ASSEMBLY.
6. RECEIVER ASSEMBLY.
7. CONTROL GRIP ASSEMBLY.
8. BOLT AND BACKPLATE ASSEMBLY.
9. GUIDE ROD AND SPRING.
10. CHARGER ASSEMBLY, LEFT.
11. SEAR ASSEMBLY.
12. ALIGNMENT GUIDE ASSEMBLY.
13. BARREL.
14. FLASH SUPPRESSOR.
15. OGIVE PLUNGER ASSEMBLY.
16. ROUND POSITIONING BLOCK.
17. REAR SIGHT ASSEMBLY.
18. CHARGER ASSEMBLY, RIGHT.
19. FEED TRAY.
20. FEED SLIDE ASSEMBLY.
21. COVER PINS.
22. FRONT SIGHT BLADE

MK-19 MOD 3 Automatic Grenade Launcher Nomenclature (Cont)

Sights: The MK-19 has a blade-type front sight attached to the top cover assembly.

MK-19 Front Sight

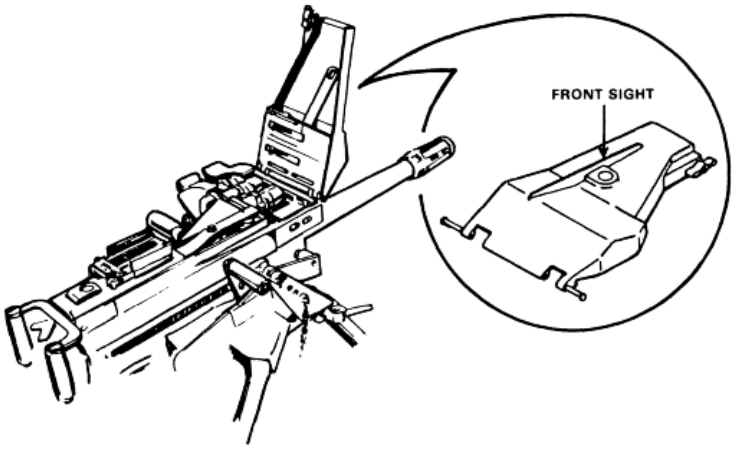

The MK-19 has a leaf-type rear sight (with an adjustable range plate) (see diagram below) mounted on a spring dovetail base, which should be folded forward to a horizontal position when the weapon is moved, and which has, on the sight leaf, a range plate incremented in 100-meter intervals from 300 to 1500 meters. Range changes may be made using either the slide release or the elevation wheel:

- The slide release is used to make major changes in elevation
- The elevation wheel is used to make fine adjustments

The rear sight is adjustable for windage; turning the windage screw

- Clockwise moves the sight to the right
- Counterclockwise moves the sight to the left

One click equals a 1-mil change.

MK-19 Rear Sight

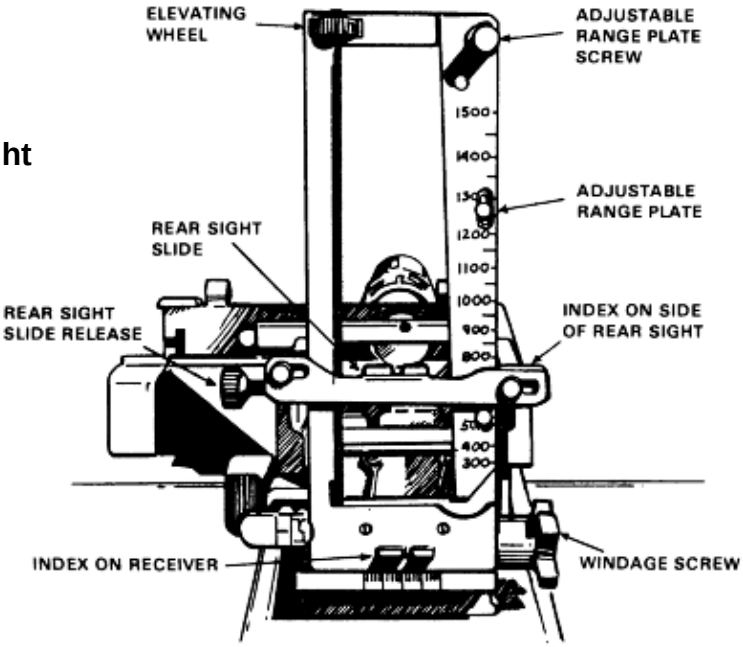

MK-19 MOD 3 Automatic Grenade Launcher Operation

Weapon Conditions: The table below describes the four weapon conditions for the MK-19.

Condition	Description
1	• Bolt to the rear • A round on the face of the bolt • Weapon on SAFE
2	• Bolt forward on an empty chamber • Round is up against the round positioning block and grasped by the bolt extractors • Weapon is on FIRE
3	• Bolt Forward on an empty chamber • Rounds inserted and held in place by the secondary positioning pawls • Weapon is on FIRE
4	• Bolt forward on an empty chamber • No source of ammunition • Weapon is on FIRE

- **Unloading/Clearing**: The table below lists the steps for unloading/clearing the MK-19.

Step	Action
1	Lower and pull both charger handles to the rear maintaining positive control (see diagram below). Put the weapon on safe. Inspect the face of the bolt through the receiver rail. If a round is present on the face of the bolt, insert a section of the cleaning rod through either side of the receiver rail, place it on top of the live round or cartridge case as close to the bolt face as possible, and push down to force the round out of the MK-19. The team leader should place his hands under the cradle to catch the round. 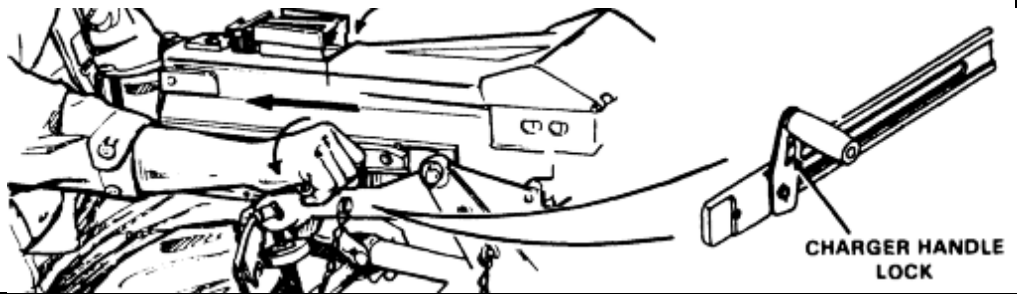

MK-19 MOD 3 Automatic Grenade Launcher Operation (Continued)

Step	Action
2	Open the top cover assembly (see diagram below).
3	Take the ammunition from the feed tray by reaching beneath the feed tray and pressing the primary and secondary positioning pawls (see diagram below). At the same time, slide the linked rounds out of the MK-19 through the feed throat. Ensure that the bolt face, chamber, and feed tray are clear of ammunition. Insert a cleaning rod through the barrel to verify that it is free of any blockages. 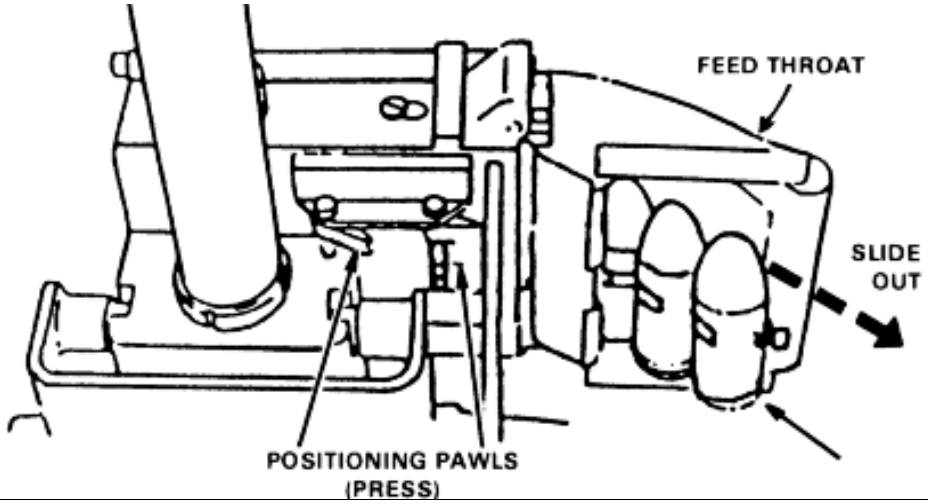
4	Place the safety switch on FIRE (“F”) (see diagram in step 1).
5	While maintaining rearward pressure on the charging handle, press the trigger and ease the bolt forward
6	Close the top cover assembly.
7	Place the safety switch on SAFE.
8	Close top cover after you ride the bolt forward ensuring the bolt is sent home on an empty chamber.

MK-19 MOD 3 Automatic Grenade Launcher Operation (Continued)

- **Weapon Commands.**
  - **Load**: The table below lists the steps to execute “LOAD” taking the MK-19 from condition 4 to condition 3.

Step	Action
1	Point the weapon in a safe direction.
2	Ensure the weapon is in condition 4.
3	Be sure the cover is raised, the bolt is forward, and the weapon is on SAFE.
4	Insert the first round into the feeder, female link first (see diagram below). 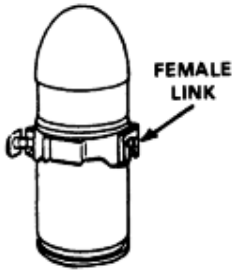 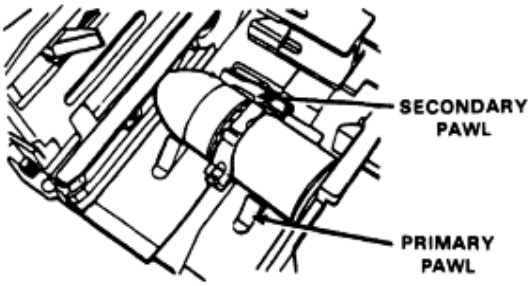
5	Push the round across the first feed pawl.
6	Move the feed slide assembly to the left by pushing the secondary drive lever to the right (see diagram below). 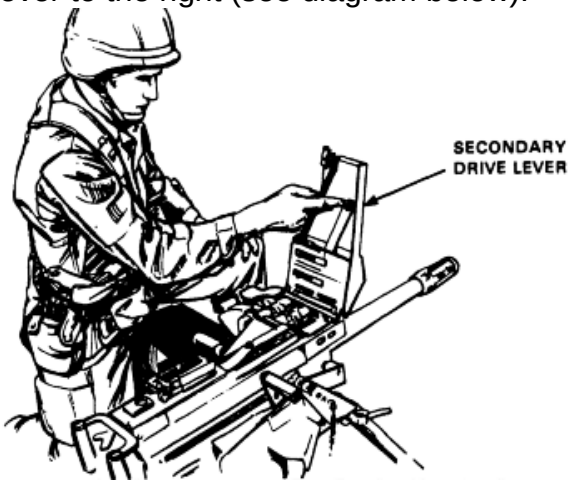 NOTE: To close the cover, the bolt must be forward and the feed slide assembly must be to the left.
7	Close the cover.

MK-19 MOD 3 Automatic Grenade Launcher Operation (Continued)

- **Make Ready**: The table below lists the steps to execute “MAKE READY” taking the MK-19 from condition 3 to condition 1.

Step	Action
1	Point the weapon in a safe direction.
2	Grasp the charger handles with the palms down (see diagram below). Press in on the charger handle locks. Rotate the handles down and pull them sharply to the rear. After locking the bolt to the rear, return the charger handles forward to their original upright position. 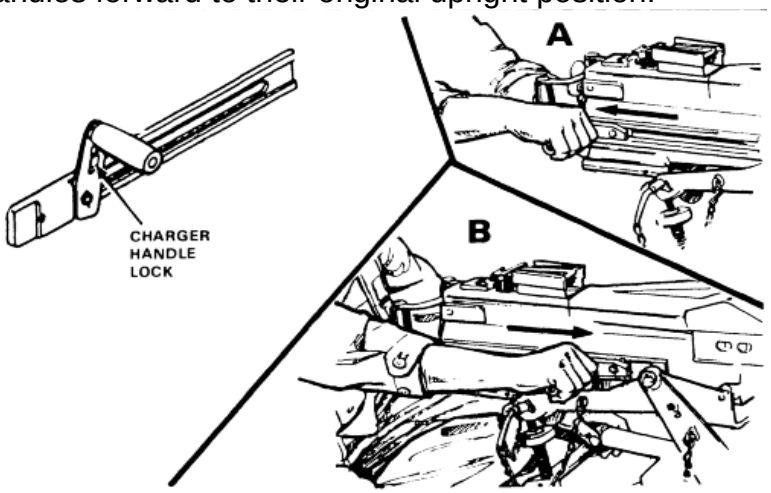 **<u>CAUTION</u>**: Failure to completely pull the bolt to the rear may result in the misalignment of the M16A2 links on the round, causing the round to feed improperly.
3	Place the safety on FIRE and press the trigger. The bolt slams forward and grasps the first round in the bolt extractors.
4	Grasp, unlock, and turn downward on the charger handles and lock the bolt to the rear again.
5	Ensure the safety switch is on SAFE.
6	Return the charger handles to their original upright position. **NOTE**: Charger handles must be in this position in order for the MK-19 to fire.
7	The MK-19 is ready to fire.

MK-19 MOD 3 Automatic Grenade Launcher Operation (Continued)

- **Unload/Clear Weapon**: The table below lists the steps to execute taking the MK-19 from condition 3 to condition 4.

Step	Action
1	Point the weapon in a safe direction.
2	Ensure the weapon is on SAFE.
3	Raise the cover.
4	Press the primary and secondary pawls; slide the linked rounds out of the feed tray.
5	Rotate the handles down and pull the bolt to the rear.
6	Keep both charger handles to the rear.
7	Visually inspect the chamber and the face of the bolt.
8	Place weapon of FIRE.
9	Ride the bolt forward and return the weapon to the SAFE position.
10	Close the cover.

- **Unload/Clear Gun**: The table below lists the steps to take the MK-19 from condition 1 to condition 4:

Step	Action
1	Point weapon in a safe direction.
2	Do *not* raise the cover.
3	Ensure the weapon is on SAFE.
4	Rotate the charger handles down and pull the bolt to the rear.
5	Return one charging assembly forward.
6	Insert a length of cleaning rod through the right hand receiver rail.
7	Push down on the round, forcing it off the face of the bolt and out the bottom of the receiver. Catch the round as it falls.
8	Open the cover.
9	Press the primary and secondary pawls; slide the linked rounds out of the feed tray.
10	Visually inspect the chamber and the face of the bolt.
11	Ride the bolt forward and return the weapon to the SAFE position.
12	Close the cover.

- **Malfunctions and Stoppages**: A malfunction is a failure of the weapon to function properly. Neither defective ammunition nor improper operation of the gun by a crewmember is considered a malfunction of the MK-19. The two most common MK-19 malfunctions are

  - **Sluggish Action**: Excessive friction from dirt, carbon buildup, lack of lubrication, or burred parts usually cause sluggish action. Inspect the MK-19 for worn and damaged parts and replace them as necessary. To remedy continued sluggish operation, clean, lubricate, tighten, or replace parts as required.

MK-19 MOD 3 Automatic Grenade Launcher Operation (Continued)

- **Runaway Gun**: A runaway weapon continues to fire after the trigger has been released. Worn parts or short recoil of the bolt assembly may cause runaway gun. Consider the amount of ammunition left and the type of MK-19 mount used when finding the best way to stop the weapon.

If ammunition is not a factor and the MK-19 is being employed in the free gun mode, keep rounds on target until the all the rounds on the belt have been fired.

If the MK-19 is mounted on either the M3 tripod or on a vehicle with the T&E (traversing and elevating) mechanism attached, hold the grip with one hand. At the same time, press the charger handle locks and lower one charger handle. This action interrupts the cycle of function causing the MK-19 to cease firing.

CAUTION: Do ***not*** try to break the ammunition belt.

- **Immediate Action**: The table below lists the steps to perform immediate action.

Step	Action
1	Shout "Misfire!"
2	Wait 10 seconds.
3	Place the weapon on SAFE. Pull bolt to the rear maintaining positive control of the charger handles (the team leader catches the round as it is ejected). If the round (with ogive) ejects, push the charger handles forward and up to their locked position and continue to fire. If no round ejects (or round but no ogive), go to step 4.
4	Unload and clear the weapon, begin remedial action, and inspect for bore obstruction.

- **Remedial Action**: When immediate action fails to reduce a stoppage, its cause must be investigated, usually by disassembling the weapon and inspecting the appropriate parts. Parts may have to be replaced before the gun can be returned to action.

Another problem may be detected and corrected without the need for disassembly: Bore obstruction.

Bore obstruction means that part of the previous round may be lodged in the barrel and could possibly prevent the next ogive from passing safely through it. The gunner/crew should be alert for:

- A muffled report from the gun when it fires
- Smoke and debris from the bottom of the receiver
- Failure of the ogive to leave the muzzle

MK-19 MOD 3 Automatic Grenade Launcher Operation (Continued)

The table below lists the safety procedures for clearing a projectile lodged in the bore.

Step	Action
1	Cease fire immediately.
2	Place the weapon on SAFE.
3	Clear the area around the gun of personnel and ammunition.
4	Clear the weapon. If spent cartridge is extracted, take subsequent action for a suspected obstruction of the bore: • Pull the bolt to the rear maintaining positive control of the charging handles. • Clear the bore using a round removal tool. The round removal tool is to be used only with the M430 HEDP, M385 TP, and M918 TP ammunition; do *not* use it with the M383 HE or M384 HE ammunition. • Place the round removal tool collar over the end of the flash suppressor and screw the five cap screws into slots in the flash suppressor. • Attach the handle to the end of the threaded rod. • Position the cup of the threaded rod over the ogive. • Screw the threaded rod into the barrel and push out the projectile into the hands of the team leader. • Carefully carry projectile to designated area and notify EOD.
5	Notify an armorer.

MK-19 MOD 3 Disassembly and Assembly

- **Disassembly**: Disassembly of the Mk 19 includes removal of parts to the extent explained in this text. Only qualified ordnance personnel are authorized to conduct further disassembly.

  To ensure that parts are not lost and are replaced properly, place them in the order in which they are taken off on a clean flat surface.

  Before you begin disassembly of the Mk 19, clear the weapon.

  - **Removing the Secondary Drive Lever:** The table below lists the steps to remove the secondary driver lever:

Step	Action
1	Raise the top cover assembly and push the secondary drive lever pivot post from the outside of the top cover assembly (see diagram below). 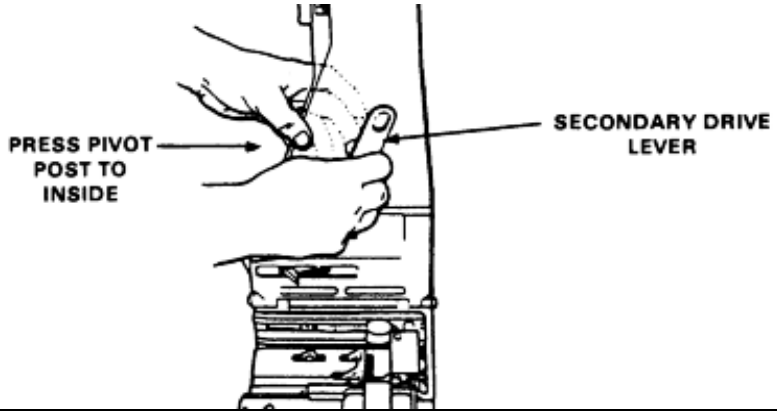
2	Separate the secondary drive lever from the top cover assembly.
3	Take the secondary drive lever from the slide assembly and allow the feed slide and tray assembly to close.

  - **Removing the Top Cover Assembly**: The table below lists the steps to remove the top cover assembly.

Step	Action
1	Hold the top cover straight up with one hand and pull the top cover pins from both sides (see diagram below). 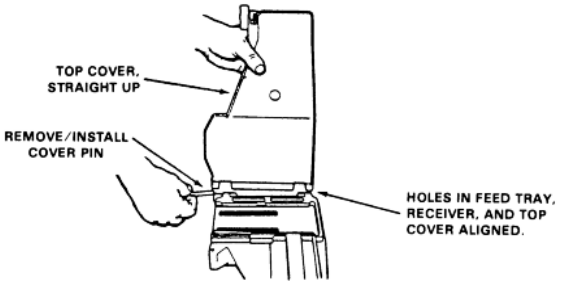
2	Lift the top cover assembly straight up and off.

MK-19 MOD 3 Disassembly and Assembly (Continued)

- **Removing the Feed Slide Assembly and Feed Tray**: The table on the next page lists the steps to remove the feed slide assembly and feed tray.

Step	Action
1	Align the tabs on the feed slide assembly with the slots in the feed tray and lift them straight up (see diagram below). 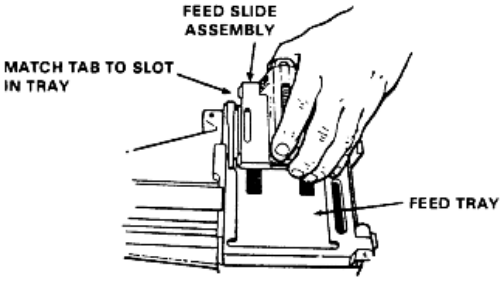
2	Take out the feed tray (see diagram below) by lifting it straight up. 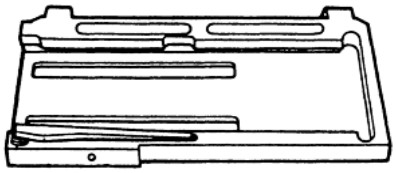

MK-19 MOD 3 Disassembly and Assembly (Continued)

- **Remove the Bolt and Backplate Assembly**: The table below lists the steps to remove the bolt and backplate assembly.

Step	Action
1	Place the safety switch in the FIRE position. **CAUTION**: Before removing the back-plate pin, be sure the bolt is in the forward position.
2	Take out the backplate pin (see diagram below) using the rim of a spent cartridge case or metal link. Pry outward on the pin lip and remove the pin with your fingers. 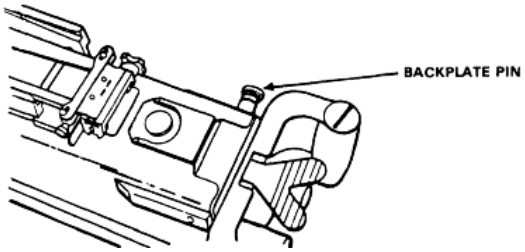
3	Grasp the control grips with both hands and lift up slightly to disengage the backplate from the locking lugs in the receiver.
4	Pull the bolt and backplate assembly to the rear (see diagram below). Once the bolt clears the sear, catch the bolt in one hand to prevent damage to the backplate assembly. 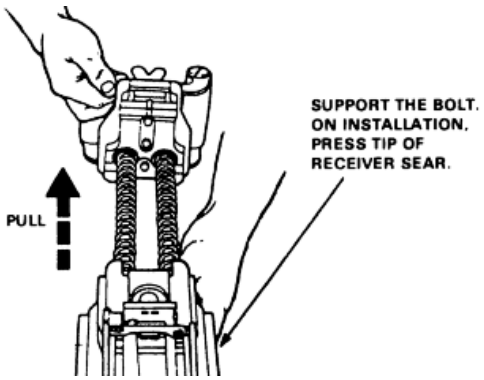

MK-19 MOD 3 Disassembly and Assembly (Continued)

- **Remove the Primary Drive Lever and Vertical Cam**: The table below lists the steps to remove the primary drive lever and vertical cam.

Step	Action
1	Reach under the top of the receiver and locate the drive lever lock. Slide the lock a quarter inch to the rear.
2	Press down on the primary drive lever pivot post, which releases both the primary drive and vertical cam.
3	Pull the primary driver lever from the front of the weapon and the vertical cam from the back (see diagram below). 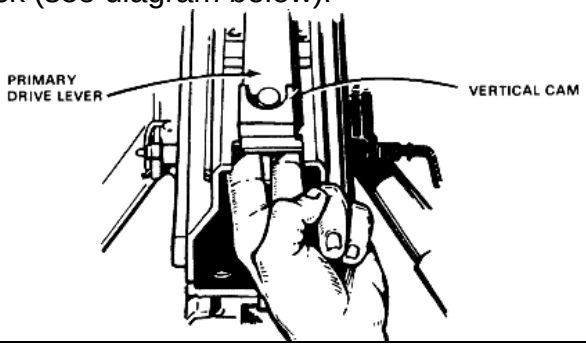

- **Remove the Sear Assembly**: The table below lists the steps to remove the sear assembly.

Step	Action
1	Turn the MK-19 on it side or upside down.
2	Use the rim of a spent cartridge case to lift up on the sear lock plunger (see diagram below). At the same time, squeeze the sear and rotate the assembly 90 degrees to the right or left.
3	Take off the sear assembly by pulling it away from the weapon. Keep pressure on the sear until the assembly comes off.
4	Place the safety switch in the SAFE position.

MK-19 MOD 3 Disassembly and Assembly (Continued)

- **Remove the Alignment Guide**: The table below lists the steps to remove the alignment guide.

Step	Action
1	Depress the tip of the alignment guide spring with your finger. 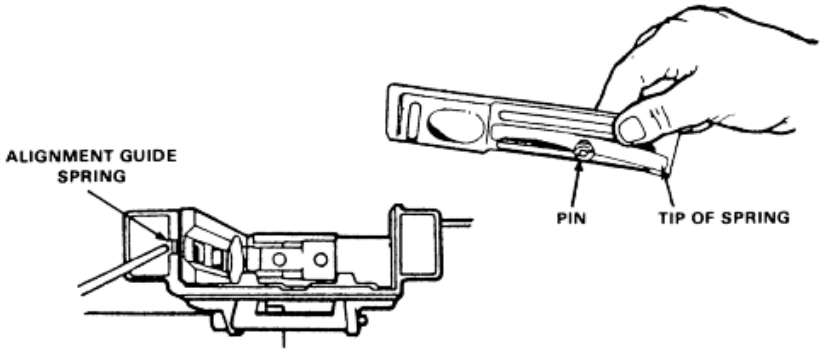
2	Slide the alignment guide out of the receiver, pulling the assembly slightly rearward.

- **Remove the Ogive Plunger and Round Positioning Lock**: The table below lists the steps to remove the ogive plunger and the round positioning lock.

Step	Action
1	Remove the ogive plunger by pulling the ogive plunger assembly out through the inside wall of the receiver. 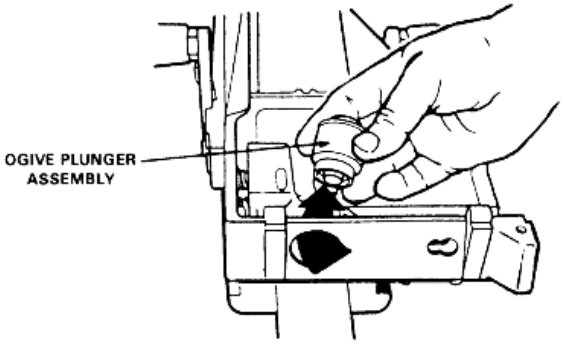
2	Remove the round positioning block by pushing it into the side of the gun, sliding it forward, and releasing it from the key slots in the receiver wall. 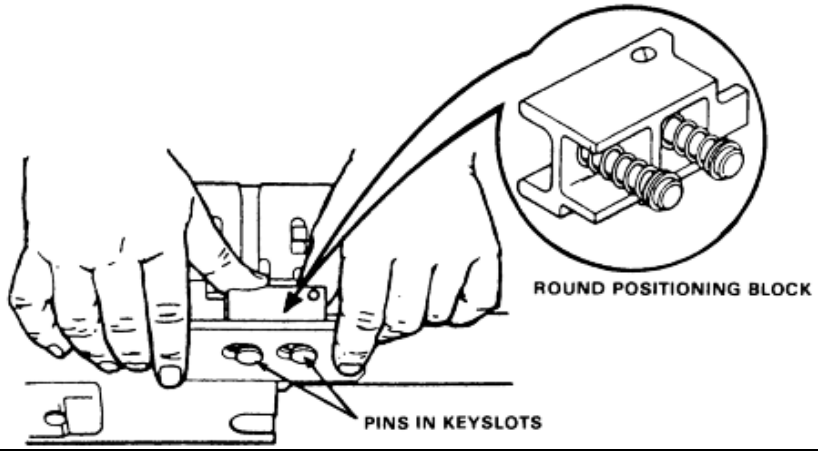

MK-19 MOD 3 Disassembly and Assembly (Continued)

- **Remove the Charger Assemblies**: The table below lists the steps to remove the charger assemblies from both sides.

Step	Action
1	Place the charger assemblies in the upright position.
2	Using a metal link or spent cartridge case, retract the lock plunger (see diagram below) at the base of the charging arm. 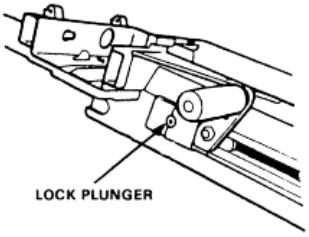
3	Slide the charger housing rearward to disengage the lugs from the key slots in the receiver (see diagram below). 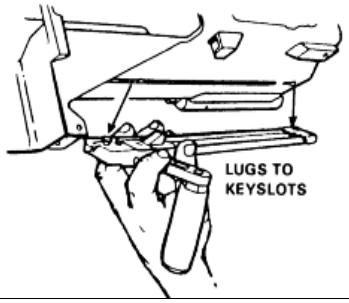
4	Lift the charger assembly away from the receiver.

NOTE: Qualified ordnance personnel must do further disassembly.

MK-19 MOD 3 Disassembly and Assembly (Continued)

- **Assembly**: To assemble the MK-19, replace the groups in the reverse order from which they were removed. The table below lists the steps to assemble the MK-19.

Step	Action
1	Replace the charger assemblies.
2	Replace the round-positioning block.
3	Replace the ogive plunger.
4	Replace the alignment guide.
5	Replace the primary drive lever and vertical cam.
6	Attach the sear assembly, depress the sear spring, and turn the assembly 90 degrees toward the barrel's center line until the assembly locks into position.
7	Insert the bolt and backplate assembly: • Be sure the cocking lever is forward. • Insert the bolt and backplate assembly into the receiver (see diagram below). 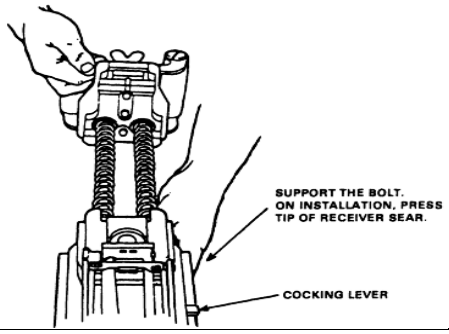
8	Be sure the safety switch is in the FIRE position so the sear can be easily depressed.
9	Press the receiver sear and slide the bolt assembly forward until the retainer pin holes in the backplate and receiver are aligned.
10	Insert the backplate retainer pin to lock the assembly in position.
11	Place the feed tray assembly on the receiver.
12	Place the feed slide assembly into the cutout slots on the feed tray.
13	Attach the top cover assembly: • Align the pinholes in the top cover assembly with the pinholes in the feed tray. • Hold the cover straight up and insert the pins into both sides of the cover. **CAUTION**: Insert the top cover pins using only your hand. Forcing the pin will break the welded crosspin.

MK-19 MOD 3 Disassembly and Assembly (Continued)

Step	Action
14	Replace the secondary drive lever: • Lift the feed slide assembly and feed tray. • Place the forked end of the secondary drive lever on the inner feed slide pin (see diagram below). • Press the raised pivot post through the hole in the top cover assembly. • Press the secondary drive lever firmly against the top cover assembly. 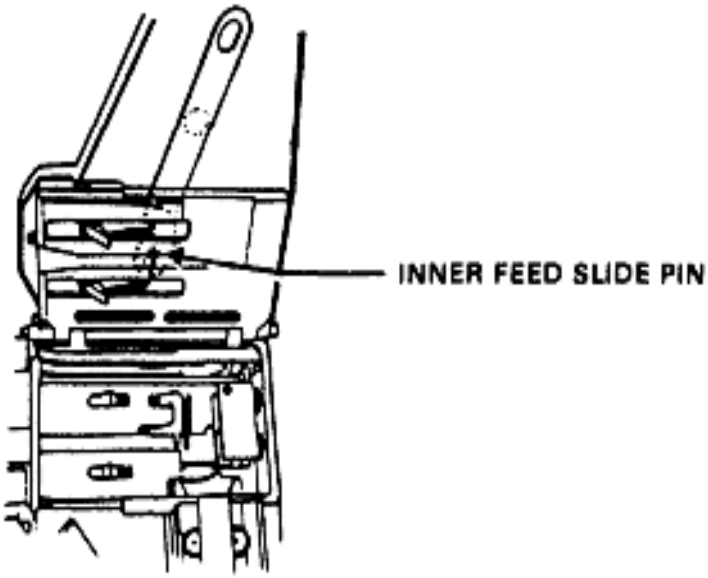 **CAUTION**: If secondary drive lever is not properly engaged with inner feed slide pin, the weapon will not fire properly and may damage the weapon.

- **Function Check**: After disassembly and assembly and before operating the MK-19, conduct a function check. The table below lists the steps to conduct a function check.

Step	Action
1	Open the feed tray cover and inspect the feed tray assembly and chamber to ensure the gun is clear.
2	With the cover closed and the bolt to the rear and one charging assembly down and to the rear, place the safety on SAFE (“S”).
3	Pull the trigger; the bolt should not go forward.
4	Place the safety on FIRE (“F”).
5	Pull the trigger and ride the bolt forward.
6	Open the feed tray cover.
7	Inspect the firing pin and bolt face for sings of worn or damaged parts.
8	Move secondary drive lever back and forth to ensure that it moves freely.
9	Press the feed pawls to check for spring pressure.
10	Ensure that the secondary drive lever is to the right and engaged under the feed tray.
11	Slide the feed slide to the left; before closing the cove, ensure that the bolt is forward.

MK-19 MOD 3 Cleaning and Inspection

The table below lists the cleaning materials and lubricants authorized for the MK-19.

Cleaning Materials	Lubricants
Cleaning, lubricant, protectant (CLP)	Cleaner, Lubricant and Protectant (CLP)
Rifle bore cleaner (RBC)	Lubricant, arctic weather (LAW)
Dry cleaning solvent: *Not* authorized for the • Bolt • Backplate assembly • Ogive plunger • Sear assembly	Lubricant, weapon semi-fluid (LSA)
	Lubricant Semi-Fluid Teflon (LSA-T)

To inspect the MK-19, mount it on the M122 tripod and place it on a poncho with the spare barrel case.

NOTE: The inspecting officer, or the unit leader, may specify the exact position of the gun and contents of the spare barrel case.

- Always check for cleanliness.
- Look for broken, missing, or burred parts.
- Test the spring tension of appropriate parts
- Perform appropriate checks to determine if the gun functions properly.

MK-19 MOD 3 Cycle of Operations

The MK-19 cycle of operation includes six steps:

- Feeding
- Chambering
- Firing
- Extracting
- Ejecting
- Cocking

More than one step may be done at the same time.

- **Feeding:** (See diagram below.) The gases from the burning powder force the bolt, with a new round in its extractors, to the rear. During this blowback, several things happen at once:

  - The curved rail of the vertical cam de-links and forces down the new round on top of the spent case, forcing the spent case out of the bolt fingers and ejecting it out the bottom of the gun
  - The feed slide assembly pulls the rounds to the right in the receiver ammunition-feed area, where a new round is ready to pick up (automatic feed).
  - During the bolt's travel to the rear, the cocking lever is pushed forward, which cocks the firing pin.
  - When the bolt reaches the limit of its rearward travel, the recoil springs (24) are completely compressed.

  The bolt buffers (25) absorb over-travel, reducing trunnion load (recoil force) at the gun-mount attaching points. The bolt sear will not engage the receiver sear if the trigger is still depressed, and another firing cycle occurs. Release of the trigger causes the bolt sear to engage the receiver sear, which prevents the bolt from going forward, and firing stops.

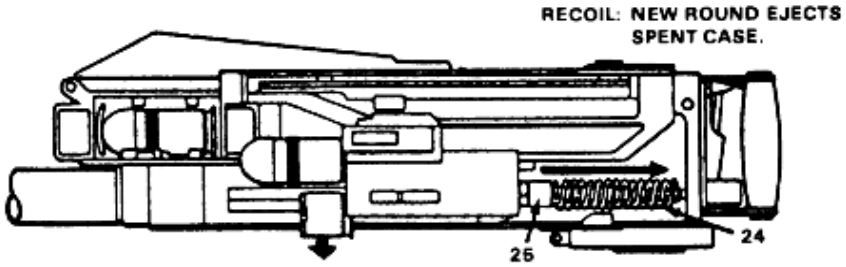

Feeding

MK-19 MOD 3 Cycle of Operations (Continued)

- **Chambering** Once the trigger is depressed, the sear is depressed, permitting the recoil springs to drive the bolt forward on the rails. As the bolt nears the forward end of the rail, the nose of the round enters the rear of the chamber. The round is fully chambered when the leading edge of the casing comes into contact with the rear of the chamber and the bolt is in the forward-most position.

- **Firing:** Pressing the trigger depresses the tip of the receiver sear (21). The receiver sear disengages the bolt sear (22), which releases the bolt forward under spring pressure with a round in the blot fingers. The cocking lever hits the forward end of the left receiver rail slot, forcing the lever to the rear. The bolt sear hits a plate in the bottom of the receiver, which pushes the firing pin sear up to release the firing pin. A combination of the bolt's inertia and pressure from the firing pin spring drive the firing pin forward. The tip of the firing pin detonates the primer. The round is not completely inside the chamber at the moment the weapon is fired. The cartridge case, held by the bolt fingers, protrudes from the chamber (23). The explosion forces the projectile down the bore.

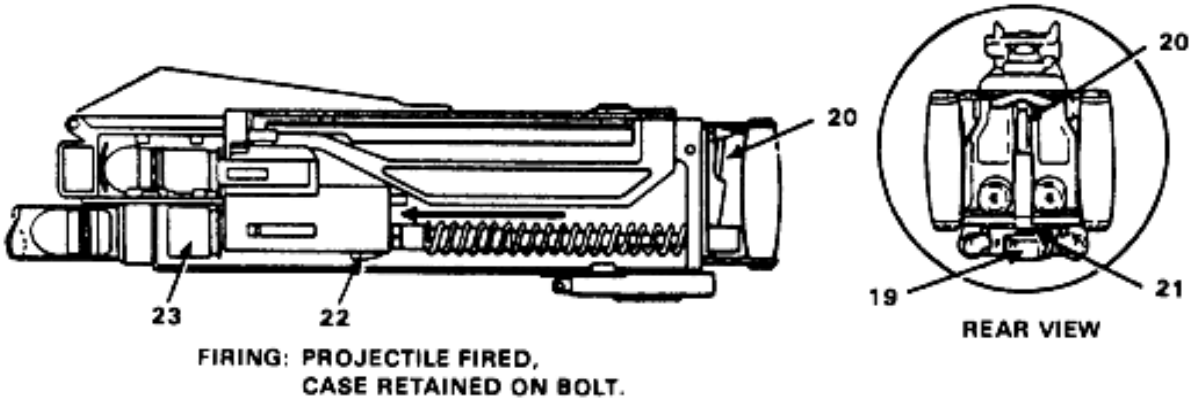

Firing

MK-19 MOD 3 Cycle of Operations (Continued)

- **Extracting (Delinking):** (See diagram below.) When a round is stripped from the belt, it is extracted or "delinked". This happens, after the MK-19 has been charged once, when the trigger (10) is pressed. The bolt slams forward and the bolt's extractors (11) snap over the rim of the cartridge case. When the MK-19 is charged again, the extractor pulls the leading round to the rear and separates the male and female links. The curved edge of the vertical cam (12) forces the lead round out of the extractors and into the bolt fingers (13). With the bolt completely to the rear, the round lines up with the chamber (14) and is ready to fire. As the original leading round chambers, the next round aligns with the bolt extractors.

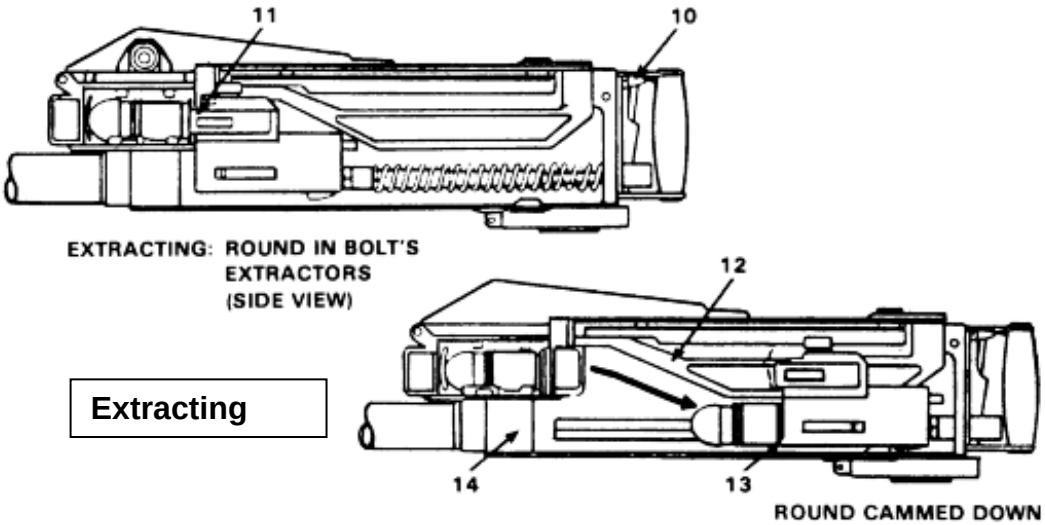

Extracting

- **Ejecting:** The vertical cam forces a new round into position on the face of the bolt and ejects the spent casing out through the ejection port.

- **Cocking:** The rearward movement of the bolt (see diagram below) causes the cocking lever (15) to retract the firing pin (16). When the cocking lever hits the rear end of the left receiver rail slot (17), the cocking lever is forced forward. The cocking lever retracts the firing pin, which the firing pin sear holds to the rear (18).

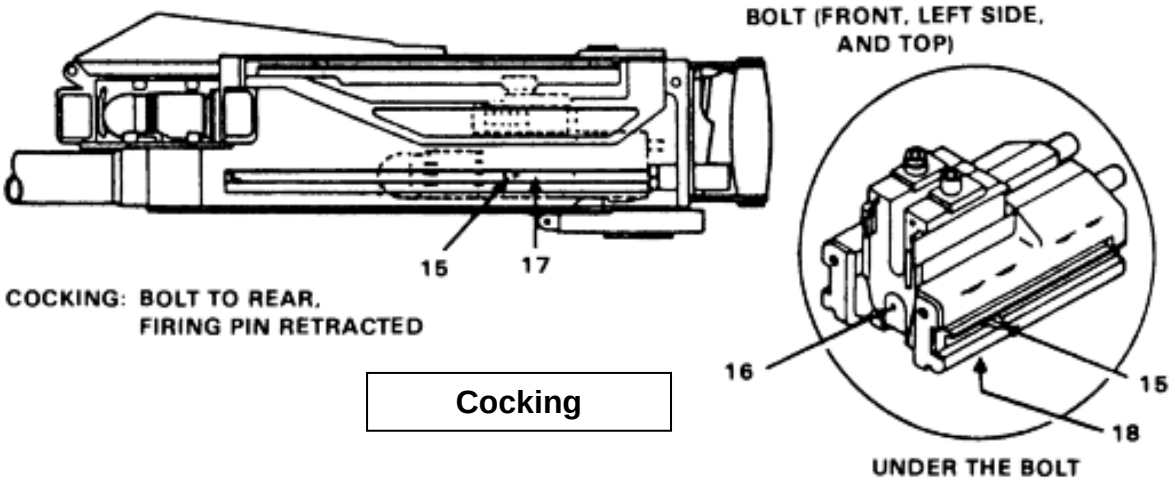

Cocking

MK-19 MOD 3 Mounts and Accessories

The MK-19 is used in either the ground- or vehicle-mount mode. The most often-used ground mount is the M3 tripod. The MK-19 may be mounted on any vehicle equipped for the M2 .50 caliber machine gun. The MK64 MOD 7 gun cradle, issued with the MK-19, gives the MK-19 its mounting flexibility.

- **MK64, MOD 7, Gun Cradle**: Use the Mk 67 MOD 7 gun cradle to mount the Mk 19 to the tripod or ring mount. Attach the ammunition container bracket to the side plate of the cradle. In the center of the cradle is a pintle bushing and lock in which the M2 may be mounted. The front of the Mk 19 is mounted on the two forward lugs of the gun cradle. The retainer pin secures the rear. Insert the cradle stow pin to hold the cradle in a horizontal position during travel (see diagram below).

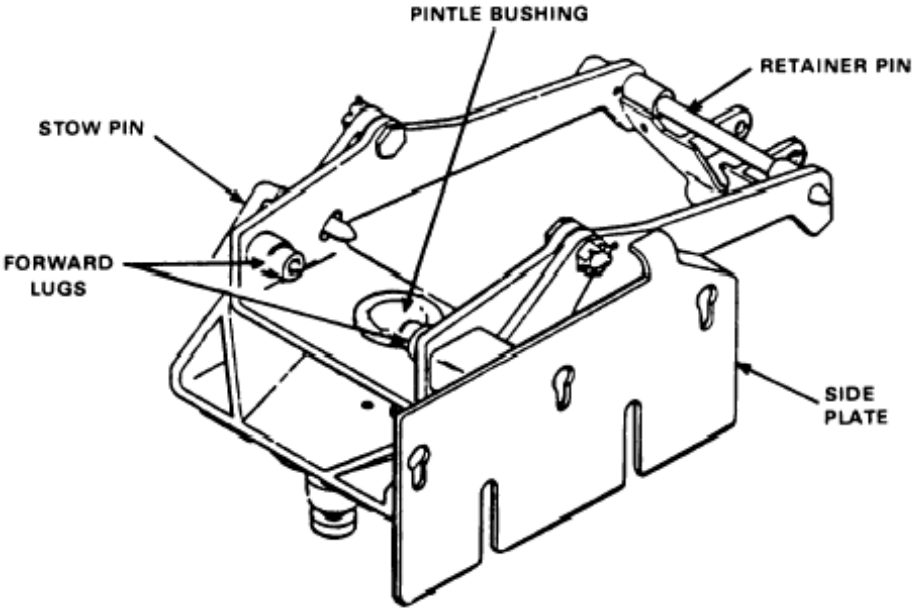

MK64 MOD 7 Gun Cradle

MK-19 MOD 3 Mounts and Accessories (Continued)

- **Ground Mount**: Mount the MK-19 as close to the ground as possible and lock the tripods trail legs open. Set the adjustable front tripod leg to an angle of about 60 degrees to the ground.

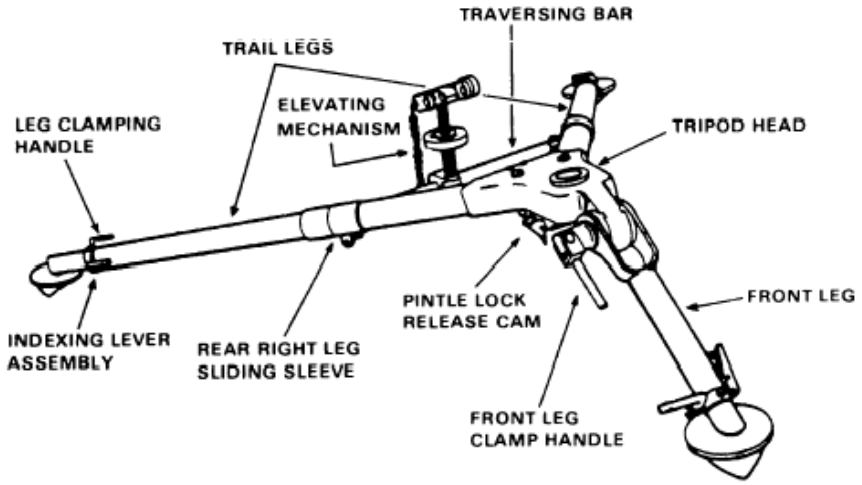

Ground Mount

In flat terrain with the extensions closed, for example, follow the steps in the table below to place the MK-19 about 12 inches above the ground.

Step	Action
1	Set the tripod trail legs: • Unscrew the leg-clamping handle; press down on the indexing lever, and extend the leg to the desired length. • Align the indexing lever stud with one of the holes in the tripod leg extension. • Release pressure on the indexing lever allowing the stud to fit the desired hole. Tighten the leg-clamping handle.
2	Set the front leg of the tripod: • Turn the front leg clamp handle counterclockwise to loosen the front leg. • Adjust the leg to the desired angle and tighten the front leg clamp.
3	Sandbag each leg to stabilize the MK-19 for firing.

MK-19 MOD 3 Mounts and Accessories (Continued)

Step	Action
4	Mount the MK64 MOD 7 gun cradle onto the M3 tripod: • Unlock the tripod pintle lock release cam. • Insert the gun cradle's pintle into the tripod pintle bushing. • Lock the pintle lock release cam to secure the gun cradle. Check the gun cradle, by pulling up on it slightly, to ensure that it is seated and locked. 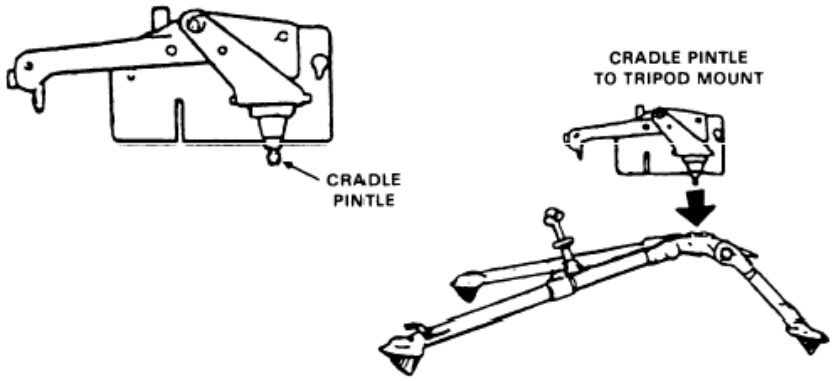
5	Attach the T&E mechanism (see diagram below): 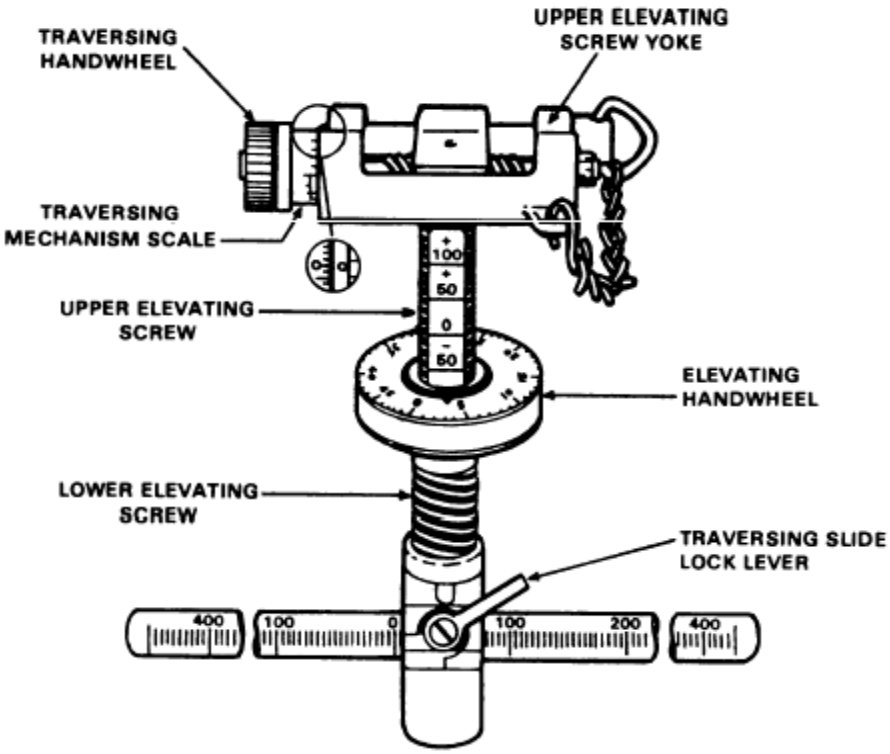

MK-19 MOD 3 Mounts and Accessories (Continued)

Step	Action
5 (cont.)	• Center the elevating handwheel between the upper and lower elevating screws. • Center the traversing handwheel on the upper elevating screw yoke. • Remove the stow pin from the gun cradle (see diagram below). 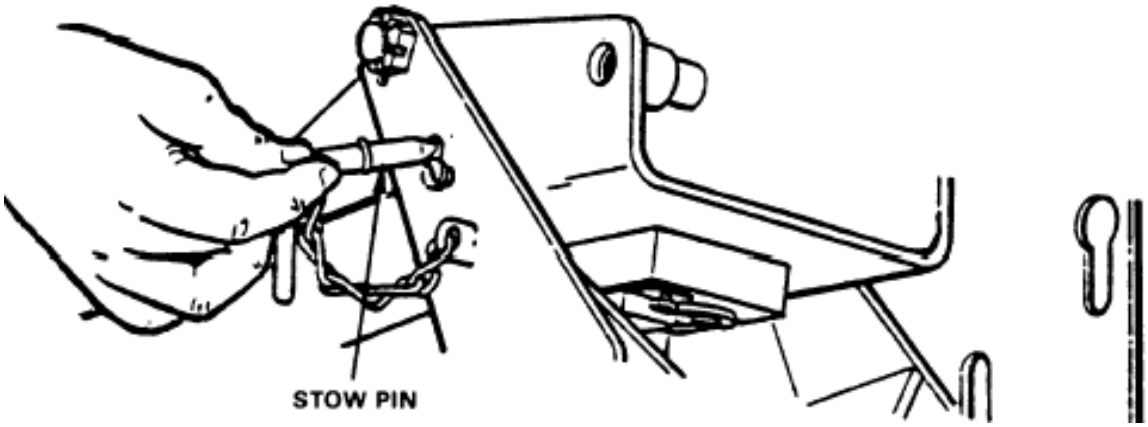 • Align the holes in the upper elevating screw yoke of the T&E mechanism with the rear holes in the gun cradle (see diagram below). 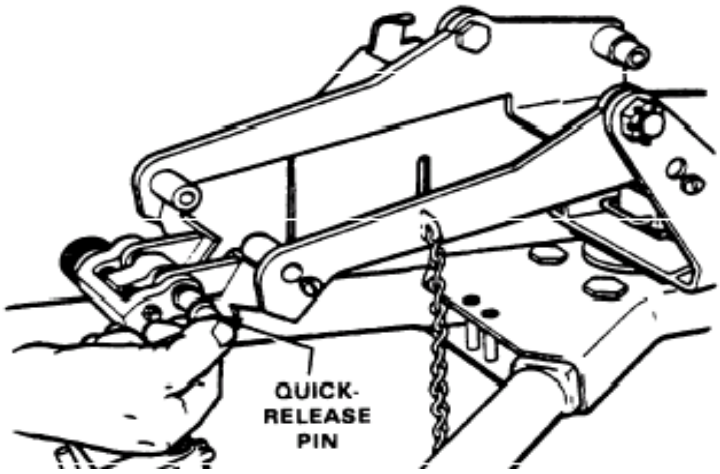 **NOTE**: The stow pin locks the cradle in a horizontal position, preventing it from depressing or elevating.

MK-19 MOD 3 Mounts and Accessories (Continued)

Step	Action
5 (cont.)	• Lock the elevating sleeve mechanism onto the center of the traversing bar. • Insert the quick-release pin from the right (see diagram below). 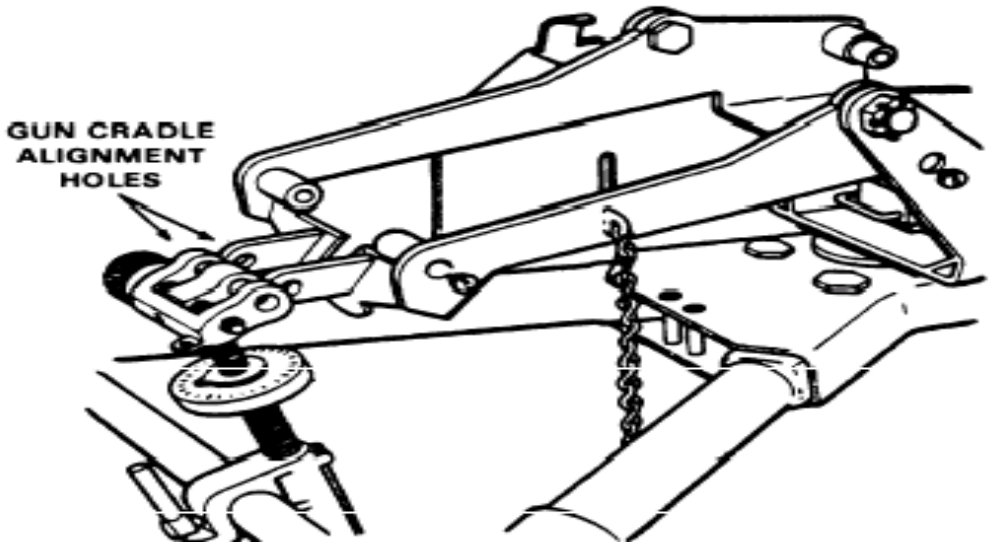
6	• Mount the MK-19: ○ Lift the MK-19 into the gun cradle. Align the grooves on the receiver with the lugs in the gun cradle, and slide the receiver forward (see diagram below). 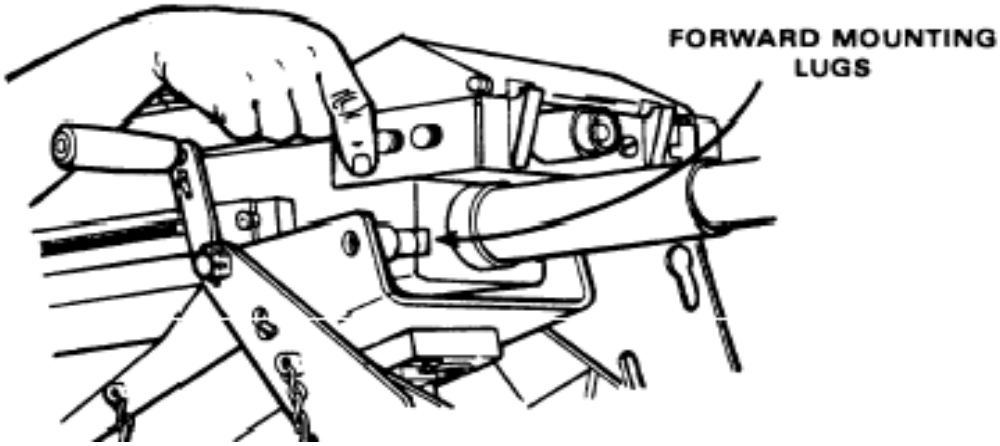

MK-19 MOD 3 Mounts and Accessories (Continued)

Step	Action
6 (cont.)	• Align the sear mounting holes with the gun cradle mounting holes (see diagram below) 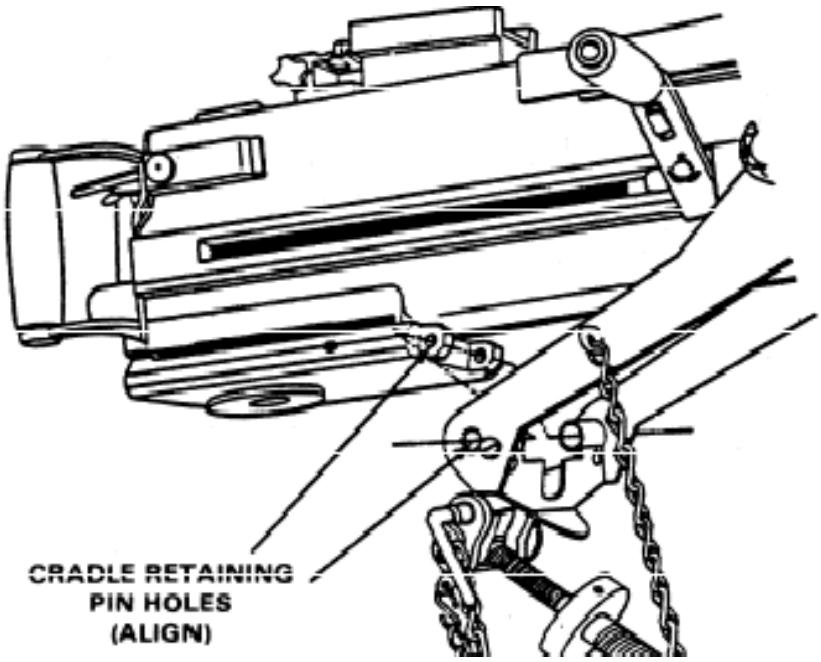 • Secure the rear of the weapon by inserting the retaining pin through the cradle and sear assembly and rotate it until it locks in place (see diagram below). If a safety clip is attached, use it to secure the retaining pin. 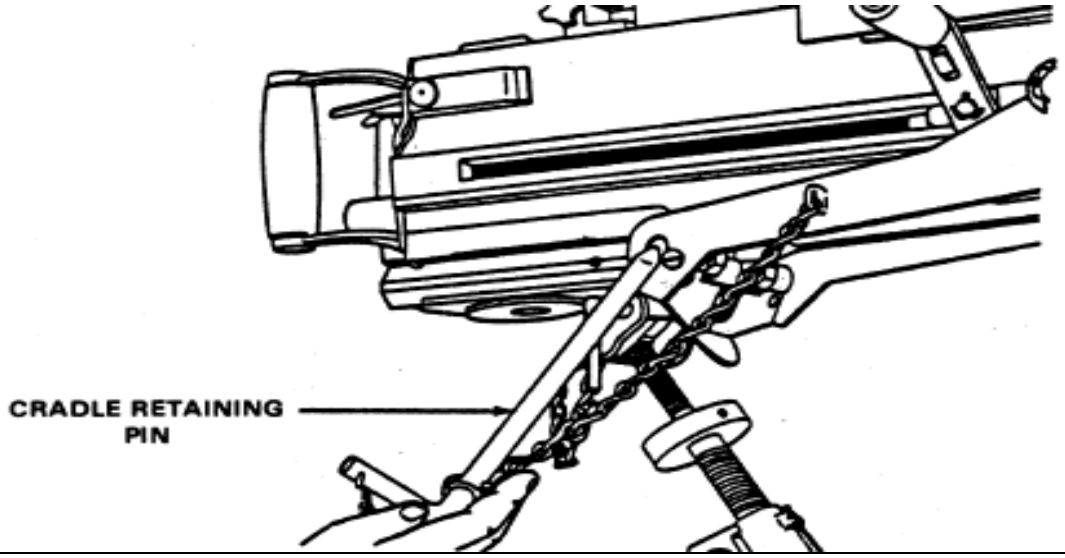

MK-19 MOD 3 Mounts and Accessories (Continued)

Step	Action
7	Attach the feed throat to the MK-19 by squeezing together each set of grip pins (see diagram below) and attaching the feed throat to the front left-hand side of the receiver assembly. 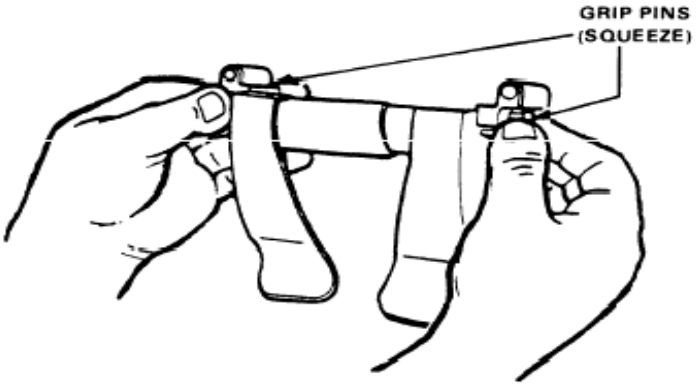 The pins of the feed throat must line up with the pinholes in the receiver (see diagram below). 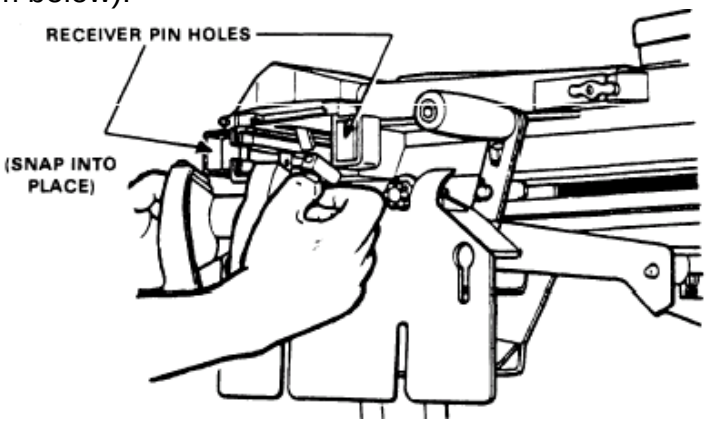 Relax pressure on the spring-loaded grip pins so they will snap into place (see diagram below). 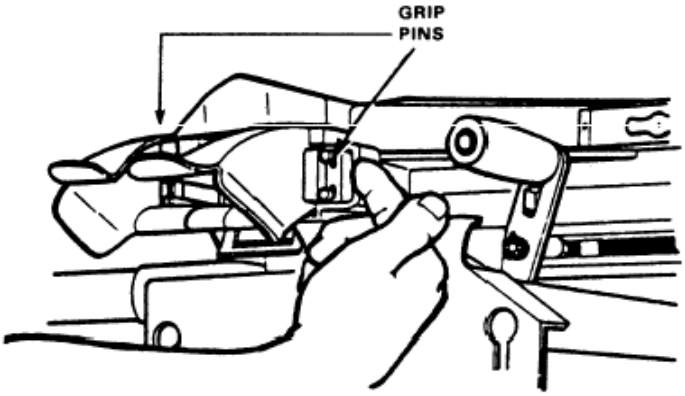

MK-19 MOD 3 Mounts and Accessories (Continued)

Vehicle Mounts: The table below describes the vehicle mounts for the MK-19.

Type of Mount	Description
Pintle adapter 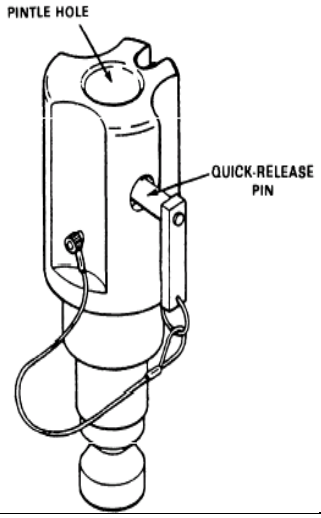 	• Is needed to mount the MK-19 to vehicles • Upper end accepts the gun cradle pintle, which is secured by a quick-release pin • Lower end fits the o Mounting wells of the HMMWV weapon platform o M36A2 ring- mount with the M66 ring
Train and elevating assembly 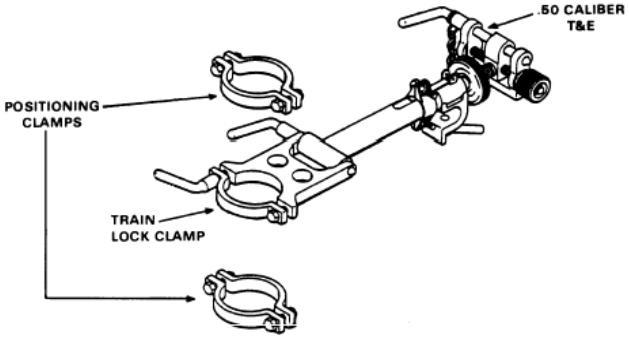 	• Secures the MK64 MOD 7 gun cradle to the HMMWV weapon platform pedestal • Allows mechanical fire control adjustments • A train lock clamp attaches the lower end of the train and elevating assembly to the pedestal; clamp may be released or locked in position by a train lock handle. When used on the HMMWV weapon platform pedestal, only one clamp is needed above the train lock clamp. • Upper end of the train and elevating assembly is a standard caliber .50 T&E mechanism

MK-19 MOD 3 Mounts and Accessories (Continued)

Bracket mounting assembly 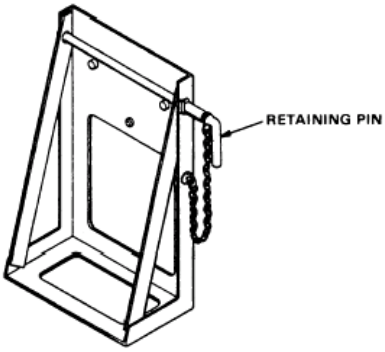 	• Supplies a mount for the M548 metal ammunition container • Has a metal frame that attaches to the gun cradle and a retaining pin that inserts through the top-inner end of the M548 ammunition container
HMMWV Weapon Platform 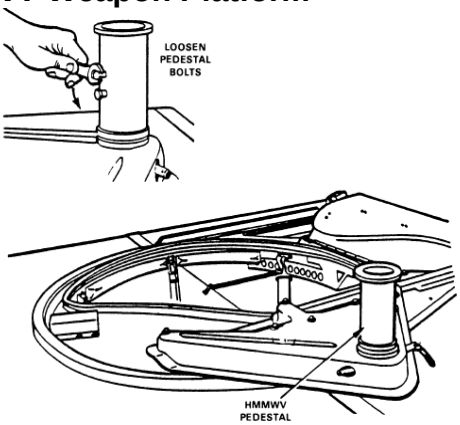 	To mount the MK-19 on the HMMWV weapon platform, • Loosen the locking bolts on the side of the HMMWV pedestal with a 9/16-inch wrench. • Insert the pintle adapter into the pedestal and tighten the bolts with the wrench. • Pull up on the pintle adapter to ensure it is installed securely. • Attach the train and elevating assembly to the HMMWV pedestal. • Mount the MK-19 and attach the bracket mounting assembly. • Attach the empty case catch bag.

M66 ring mount	• For 2 1/2- to 5-ton cargo trucks
	• To mount the MK-19 on the M66 ring mount,
	  o Insert the pintle adapter into the M36A2 ring mount with M66 ring receptacle.
	  o Install the gun cradle and mount the MK-19.
	  o Attach the bracket mounting assembly and the empty case catch bag.

MK-19 MOD 3 Review Questions

Short Answer: Write your answer in the space provided.

1. What must you do first before you disassemble the MK-19?

_____

2. What is the sustained rate of fire for the MK-19?

_____

3. Where is the weapon safety located?

_____

4. What is condition 1 for the MK-19?

_____

5. When closing the top cover, in what position must the feed slide assembly be; and in what position must the bolt be to ensure proper alignment of the primary and secondary drive levers?

_____

6. How much armor plating, in inches, is the weapon capable of penetrating, when firing ammunition at zero degree obliquity?

_____

7. Within how many meters must the 40-mm HE round impact to cause casualties to exposed enemy personnel?

_____

8. To stop a runaway weapon, what step(s) must be taken?

_____

9. What is condition 3 for the MK-19?

_____

MK-19 MOD 3 Review Questions (Continued)

10. If a stoppage occurs, how long must you wait before pulling the bolt to the rear?

_____

11. How many rounds per burst should the gunner fire when engaging targets at the sustained rate?

_____

12. What is the maximum effective point target range of the MK-19?

_____

13. Which tripod is used with the MK-19?

_____

Matching: For questions 14 through 18, use the illustration below.

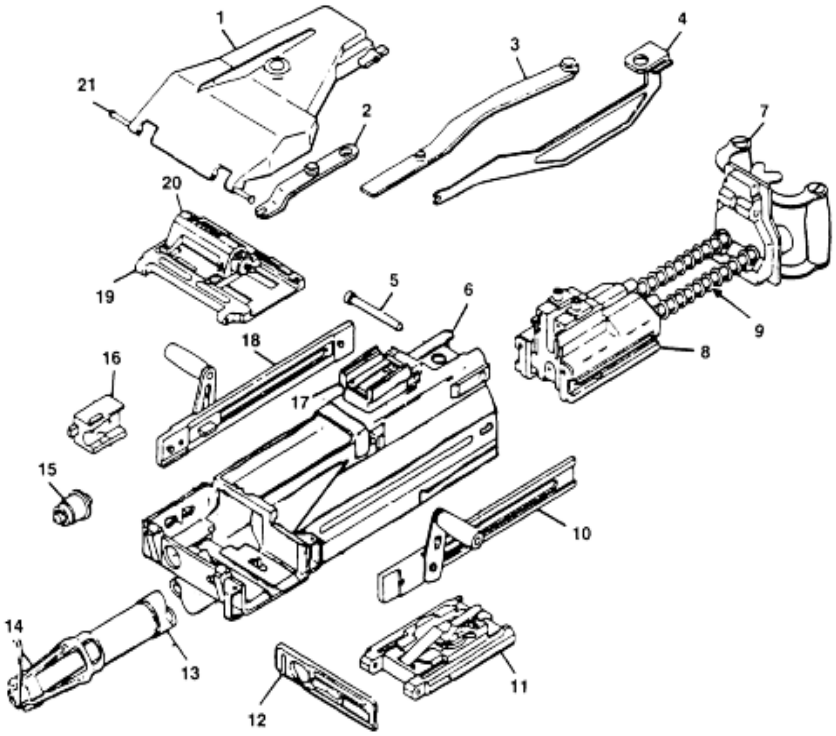

MK-19 MOD 3 Review Questions (Continued)

14. Which component is the ogive plunger assembly?

_____

15. Which component is the feed slide assembly?

_____

16. Which component is the secondary drive lever assembly?

_____

17. Which component is the round positioning block?

_____

18. Which component is the sear assembly?

_____

True or False

19. When loading the weapon, place the female link end of the ammunition belt through the feed throat and draw the ammunition into the weapon feed area.
True / False

20. The MK64, MOD 7 gun cradle is used with the tripod and ring mounts.
True / False

MK-19 MOD 3 Review Question Answers

1. What must you do first before you disassemble the MK-19?
Clear the weapon.

2. What is the sustained rate of fire for the MK-19?
40 rpm (3-5 round bursts)

3. Where is the weapon safety located?
On the sear assembly at the bottom rear of the receiver assembly

4. What is condition 1 for the MK-19?
Rounds inserted all the way to the round positioning block
Bolt to the rear
Round on the face of the bolt
Weapon on safe

5. When closing the top cover, in what position must the feed slide assembly be; and in what position must the bolt be to ensure proper alignment of the primary and secondary drive levers? **Left; forward**

6. How much armor plating, in inches, is the weapon capable of penetrating, when firing ammunition at zero degree obliquity? **2**

7. Within how many meters must the 40-mm HE round impact to cause casualties to exposed enemy personnel? **15**

8. To stop a runaway weapon, what step(s) must be taken?
Unlock and lower one charging handle while keeping control of the weapon

9. What is condition 3 for the MK-19?
Rounds inserted past the primary feed pawl, bolt forward, no rounds on its face, weapon on safe.

10. If a stoppage occurs, how long must you wait before pulling the bolt to the rear? **10 seconds**

11. How many rounds per burst should the gunner fire when engaging targets at the sustained rate? **3 to 5**

12. What is the maximum effective point target range of the MK-19? **1500 meters (point target) 2212 meters (area target)**

13. Which tripod is used with the MK19? **M3**

MK-19 MOD 3 Review Question Answers (Continued)

Matching: For questions 14 through 18, use the illustration below:

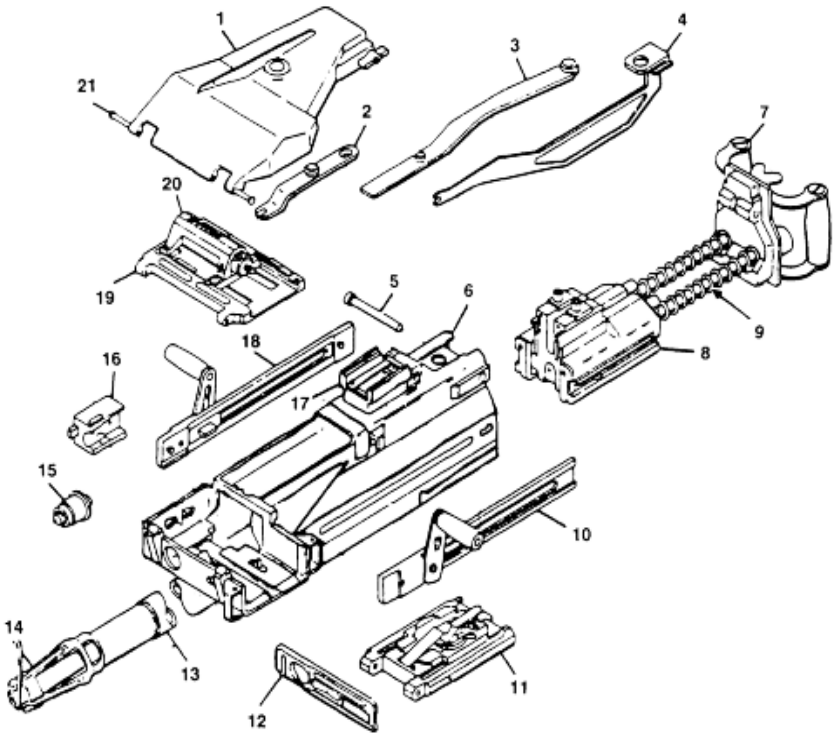

14. Which component is the ogive plunger assembly? **15**

15. Which component is the feed slide assembly? **20**

16. Which component is the secondary drive lever assembly? **2**

17. Which component is the round positioning block? **16**

18. Which component is the sear assembly? **11**

True or False.

19. When loading the weapon, place the female link end of the ammunition belt through the feed throat and draw the ammunition into the weapon feed area.
True

20. The MK64, MOD 7 gun cradle is used with the tripod and ring mounts.
True

Summary

During this lesson we discussed the characteristics, nomenclature, ammunition types, operation and capabilities of both the MK-19 MOD 3 40 MM Automatic Grenade Launcher and the M2 .50 caliber heavy machine gun, the two weapons systems that make up the heavy machine gun platoon of the Marine Corps.

References

Reference Number or Author	Reference Title
MCWP 3-15.1	Machine Guns and Machine Gun Gunnery (under revision)
FM 23-27	MK-19 40-MM Grenade Machine Gun MOD 3
TM 08521A/09761a-23&p/2a	Operator's Manual Mk19
FM 23-65	M2 .50 Cal Machine Gun
TM 02498A-10/2	Operator's Manual M2

Glossary of Terms and Acronyms

Term or Acronym	Definition or Identification
CLP	Cleaner, lubricant, preservative
HE	High-explosive
Headspace	Distance between face of the bolt and the base of the cartridge case when fully seated in the chamber on the M2 .50 cal.
HEDP	High-explosive, dual-purpose
LAW	Lubricant, arctic weather
LSA	Lubricant, weapon semi-fluid
LSA-T	Lubricant, semi-fluid teflon
M2 .50 caliber heavy machine gun	The mainstay weapon system of the Marine Corps Heavy Machine Gun Platoon.
MK-19 MOD 3	40mm grenade launcher also found in the Heavy Machine Gun Platoon of the Weapons Company.
RBC	Rifle bore cleaner
T&E	Traversing and elevating
Timing	Adjustment of the weapon so that firing takes place when the recoiling parts are between .020 and .116 inch out of battery to prevent contact between the front of the barrel extensions and the trunion block.

Notes