UNITED STATES MARINE CORPS
THE BASIC SCHOOL
MARINE CORPS TRAINING COMMAND
CAMP BARRETT, VIRGINIA 22134-5019

SQUAD WEAPONS
B2E0275
Student Handout

Munitions

Introduction

The purpose of this class is to introduce the student officer to the munitions and organic weapon systems used in the Marine Rifle Platoon. It will be covering the M249, M27, M203, and the most commonly used munitions in the Marine Corps. These weapons, in conjunction with the M16A2/A4, help build the concept of putting the enemy in a combined arms dilemma at the squad level. It is important that as officers, the capabilities and limitations of these weapons are clearly understood.

Importance

This class will prepare the student officer for employment of organic weapon systems and munitions during Squad Weapons and Munitions FFEX and ultimately in a field environment.

In this Lesson

This lesson is broken into four portions: Munitions, M203, M27 and the M249.

For the Munitions Portion, we will discuss the LAW, grenades and Pyrotechnic Signals.

For the M203 Portion, we will discuss the history of the M203, describe the characteristics of the weapon, learn the different types of ammunition available and also discuss employment considerations. Also covered will be the proper handling of this weapon, to include proper immediate and remedial actions, proper manipulation and employment of the two different sights found on the M203, and proper firing positions.

For the M249 Portion, we will discuss the history of the M249, describe the characteristics of the weapon, ammunition, and discuss employment considerations. We will also cover the proper handling of this weapon, to include proper immediate and remedial actions and care and cleaning.

For the M27 Portion, we will discuss the history of the M27, describe the characteristics of the weapon, ammunition, and discuss employment considerations. We will also cover the proper handling of this weapon, to include proper immediate and remedial actions and care and cleaning.

This lesson discusses the following topics:

Topic	Page
LAW	9
M249 Light Machinegun	24
Grenades	48
Pyrotechnic Signals	55
M203 Grenade Launcher History and Description	57
Components	59
Employment Considerations	63
Ammunition	64
Handling and Functional Procedures	67
M27 Infantry Automatic Rifle	80
Characteristics, and Specifications	80
Nomenclature	82
Safety positions/Cycle of operations	83
Disassembly	86
Maintenance	88
Assembly	90
Loading	94
Stoppages and Malfunctions	94
Corrective actions	94
Unloading and clearing	94
Mounting, Zeroing and Sight Adjustments	95
Aiming Devices	96
Care and Cleaning	103
Summary	104
References	104

Learning Objectives

Terminal Learning Objectives

TBS-DEMO-1002 Given an M67 fragmentation grenade and target, while wearing a fighting load, engage a target with an M67 fragmentation grenade to achieve impact within the effective casualty radius of the grenade.

TBS-M203-1001 Given a service rifle with a mounted M203 Grenade Launcher, cleaning gear, and lubricant, maintain an M203 grenade launcher to ensure the weapon is complete, clean, and serviceable.

TBS-M203-1002 Given a service rifle with a mounted M203 grenade launcher and ammunition, while wearing a fighting load, perform weapons handling procedures for the M203 grenade launcher without endangering personnel or equipment.

TBS-M203-1003 Given a service rifle with a mounted M203 grenade launcher that fails to fire and ammunition, while wearing a fighting load, perform misfire procedures for an M203 grenade launcher to return the weapon to action.

TBS-M203-1004 Given a grenade launcher, ammunition, and a target, while wearing a fighting load, describes how to zero a grenade launcher to ensure a round impacts within 5 meters of the target.

TBS-LMG-1001 Given an M249 light machinegun, SL-3 complete, authorized cleaning gear, and lubricants, perform operator maintenance for a M249 light machinegun and associated components to ensure the weapon and components are operational.

TBS-LMG-1003 Given a M249 light machinegun, SL-3 complete, crew, fire command, and 12 rounds of ammunition, while wearing the assault load, operate a M249 light machinegun to engage targets in accordance with the fire command.

TBS-LMG-1004 Given a M249 light machinegun, SL-3 complete, loaded with ammunition and a malfunction or stoppage, while wearing a fighting load, perform immediate action on a M249 light machinegun to return the weapon to action.

TBS-LMG-1006 Given a M249 light machinegun with a malfunction or stoppage no corrected by immediate action, crew, and 6 rounds of ammunition, while wearing a fighting load, perform remedial action for a M249 light machinegun, to return the weapon into action.

TBS-LMG-1007 Given a M249 light machinegun, SL-3 complete, Squad Day Optic (SDO), crew, 100 rounds of ammunition, and a target at 300 meters, while wearing a fighting load, zero a M249 light machinegun with SDO, to achieve point of aim/point of impact.

0311-M27-1001 Given an Infantry Automatic Rife (IAR) and cleaning gear, maintain an Infantry Automatic Rifle (IAR) to ensure the weapon is complete, clean, and serviceable.

0311-M27-1002 Given an Infantry Automatic Rife (IAR) that has stopped firing and ammunition, perform corrective measures to return the weapon to service.

0311-M27-1003 Given an Infantry Automatic Rife (IAR), sling, Squad Day Optic (SDO), individual field equipment, three (3) magazines, ammunition, and a target, zero a Squad Day Optic (SDO) to an Infantry Automatic Rifle (IAR) to achieve Point of Aim (POA) equals Point of Impact (POI) at 100 meters.

0311-M27-1005 Given an Infantry Automatic Rife (IAR), sling, Squad Day Optic (SDO), individual field equipment, sling, magazines, ammunition, a scenario with a scheme of maneuver, and targets, fire the IAR, to support the scheme of maneuver.

TBS-WPNS-1001 Given an AT-4 light anti-armor weapon which fails to fire, while wearing a fighting load, perform misfire procedures for an AT-4 light anti-armor weapon by returning the weapon to service.

TBS-WPNS-1001 Given a M72 Light Anti-Tank Weapon which fails to fire, while wearing a fighting load, perform misfire procedures for a M72 Light Anti-Tank Weapon by returning the weapon to service.

TBS-DEMO-1001 Given munitions, while wearing a

fighting load, employ pyrotechnics to support the scheme of maneuver and meet the commander's intent.

Enabling Learning Objectives

TBS-DEMO-1001a Given an evaluation, identify types of pyrotechnics, without error.

TBS-DEMO-1001b Given an evaluation, identify types of pyrotechnic safety procedures, without error.

TBS-DEMO-1002a Given a grenade, while wearing a fighting load, inspect the grenade for defects, to ensure safe employment.

TBS-DEMO-1002b Given a grenade, while wearing a fighting load, utilize a grenade pouch, to store safely on the body.

TBS-DEMO-1002c Given a grenade, while wearing a fighting load, prepare the grenade for armed employment, without endangering personnel or equipment.

TBS-DEMO-1002d Given an evaluation, define M67 capabilities, without error.

TBS-M203-1001a Given a service rifle with mounted M203 grenade launcher, clear the M203 grenade launcher, to ensure the breach is empty.

TBS-M203-1002a Given an evaluation, define M203 weapons conditions, without omission.

TBS-M203-1005a Given an evaluation, define the effective casualty radius of a M203 grenade, without omission.

0311-M27-1001a Given a list of choices, identify the characteristics of the Infantry Automatic Rifle in accordance with TM11810A-OR.

0311-M27-1001b Given a diagram and a list of choices, identify the nomenclature of the Infantry Automatic Rifle in accordance with TM 11810A-OR.

0311-M27-1001h Given an SL-3 complete Infantry Automatic Rifle, disassemble/assemble the Infantry

Automatic Rifle to facilitate maintenance of the weapon.

TBS-WPNS-1001a Given an evaluation, identify light anti-armor weapon nomenclature without omission.

TBS-WPNS-1002a Given a light anti-armor weapon, inspect the weapon to ensure serviceability.

TBS-WPNS-1002d Given an evaluation, define light anti-armor weapon capabilities without error.

TBS-LMG-1001a Given a M249 light machinegun, ensure the weapon is in condition 4 to facilitate safe weapons maintenance.

TBS-LMG-1001b Given a M249 light machinegun, disassemble and assemble the M249 within 7 minutes.

TBS-LMG-1001c Given a SL-3 complete M249 light machinegun, inspect the M249 to ensure serviceability.

TBS-LMG-1003a Given a M249 light machinegun, load the M249 to enable target engagement.

TBS-LMG-1003b Given a M249 light machinegun, unload the M249 to remove all source of ammunition.

TBS-LMG-1003c Given a M249 light machinegun with a hot barrel, change barrels on the M249 to continue engaging targets.

TBS-LMG-1004a Given a M249 light machinegun with a malfunction or stoppage, communicate a verbal ‘misfire’ warning, three times, to alert surrounding personnel.

TBS-LMG-1004b Given a M249 light machinegun with a malfunction or stoppage, for a period of 5 seconds, to prevent a hang fire.

TBS-LMG-1004c Given a M249 light machinegun with a malfunction or stoppage, pull the charging handle to the rear, to take the weapon out of battery and guard against cook-off.

TBS-LMG-1004d Given a M249 light machinegun that fails to fire, observe for feeding and ejecting of ammunition, to verify clearance of stoppage.

TBS-LMG-1006a Given a M249 light machinegun with a hot barrel, demonstrate hot barrel remedial action procedure, for a period of 15 minutes, to prevent cook-off and allow barrel to cool.

TBS-LMG-1006b Given a M249 light machinegun with a malfunction or stoppage not corrected by immediate action, identify the cause of failure to function, to determine further action.

TBS-LMG-1006c Given a M249 light machinegun, inspect the ammunition, to ensure serviceability.

TBS-LMG-1007a Given a M249 light machinegun, Squad Day Optic (SDO), crew, 25 rounds of ammunition, select targetry, to field zeroing the machinegun.

TBS-LMG-1007b Given a SL-3 complete M249 light machinegun, SDO, crew, 25 rounds of ammunition, and a target at 300 meters, while wearing the assault load, determine point of aim/point of impact, to enable corrections.

TBS-LMG-1007c Given a SL-3 complete M249 light machinegun, SDO, crew, 25 rounds of ammunition, and a target at 300 meters, while wearing the assault load, engage targets, to collect accuracy data.

TBS-LMG-1007d Given a SL-3 complete M249 light machinegun, SDO, crew, 25 rounds of ammunition, and a target at 300 meters, while wearing the assault load, after initial engagement, make corrections, to ensure accuracy of the weapon.

M72 Light Anti-Tank Weapon (LAW)

History. The Hesse-Eastern Division of Norris Thermadore developed the LAW. American production began in 1963 and was terminated in 1983. The LAW is an organic weapon located in the infantry battalion. The weapon is non-MOS specific and can be fired by any Marine with basic infantry skills.

Description**.** The LAW (see diagram below) is a light, recoil-less, antitank weapon for close-range combat, designed to let part of the propellant gases escape to the rear. Additionally, it is a discardable, self-contained rocket launcher.

M72 LAW

Specifications

Weight	5.1 pounds
Length	34.7 inches
Round Diameter	66mm
Range	
• Maximum	1000 meters
• Maximum effective	200 meters
• Minimum (training)	50 meters
• Minimum (combat)	10 meters
• Arming	10 meters
Muzzle velocity	145 mps
Armor penetration	In excess of 12 in (homogeneous steel)

M72 Light Anti-Tank Weapon (LAW) (Continued)

Nomenclature The LAW has the following components(see diagram below)

- Pull pin that provides safety for transportation and attaches to LAW by a lanyard.
- Rear hook and cover, which help stabilize the LAW on the shoulder.
- Inner and Outer Tubes.
- Trigger Assembly, Trigger Bar, and Trigger spring boot that fires the weapon.
- Nomenclature and markings that indicates the type of cartridge.
- Sights
    - Rear sight that consist of a rubber sight boot and sight bracket. Includes automatic temperature compensation.
    - Front sight that consists of a vertical center line, range marker, and lead marker, for moving targets.
- Sling assembly that provides a means to carry the LAW.

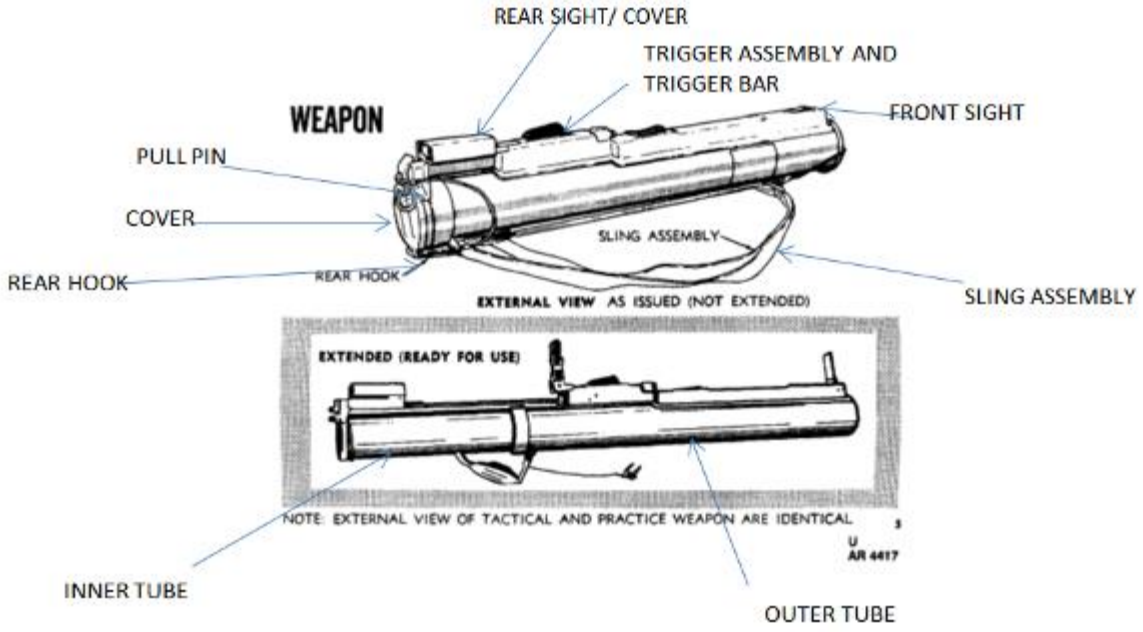

M72 LAW

Safety Devices You cannot fire the weapon unless the three safety devices (described in the table below) have been disengaged.

Safety Device	Function
Pull Pin	• Prevents the movement of the rear cover. • To disengage the pull pin, pull out and release it.
Rear Cover	• Attached to the inner tube. • Prevents the inner tube and outer tube to be extended and cocking the weapon system.
Trigger Safety Handle	• Located in the trigger assembly. • Must be fully depressed and held down before the LAW can be fired

Employment Considerations

- Back Blast. The back blast danger area extends at a 30-degree angle arc from the rear of the launcher. The Area 15 meters behind the launcher is the Danger Zone, where personnel or equipment could be injured or damaged from blast, heat and projected materials. Beyond that is the Caution Zone, which extends an additional 25 meters, where personnel or equipment could be injured or damaged from projected materials. Therefore, you must keep clear a total area of 40 meters behind the launcher when firing (see diagram below).

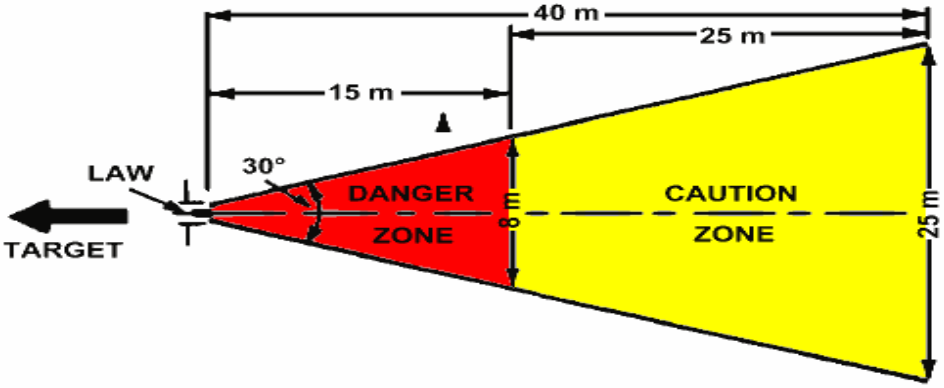

M72 LAW Back Blast

- As long as the structure has a volume of 50 cubic meters, you may fire the LAW inside a building. However,

  - All personnel must have ear protection and be forward of the rear of the launcher.
  - The structure must have good ventilation with glass removed from windows.
  - No objects can be within five meters of the rear of the launcher because the back blast is a dangerous mixture of:

M72 LAW Back Blast (Continued)

- Noise
- Dust
- Pressure
- Light

A direct line of sight to target is required. Heavy brush, vegetation, or other obstruction may deflect the rocket.

Inspecting / Functions Check

The table below lists the steps for inspecting and conducting a functions check.

Step	Action
1	The transport safety pin should be inserted in weapon.
2	Cocking lever should be in the SAFE position.
3	Be sure that the muzzle cover is intact.
4	Ensure that you have the correct color band for the type of ordnance that you wish to fire.
5	Ensure that the sights are adjustable/serviceable.
6	Ensure that the rear seal, a brown acrylic plastic plate inside the venturi, is in place and undamaged.
7	Inspect the outside of the weapon completely; it must be serviceable (no cracks, dents, bulges, missing components etc).

Functioning

The M72 LAW is a round of ammunition with an integral, rocket-type cartridge. The cartridge (see diagram below) consists of a

- Fin assembly with tracer element
- Point-initiating, base-detonating, piezoelectric fuse
- Warhead body
- Precision-shaped explosive charge

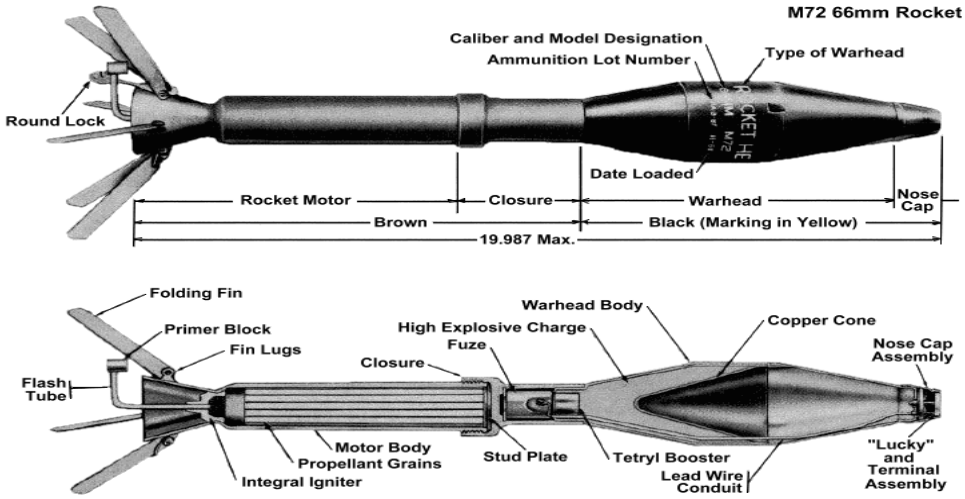

66 MM HEAT Cartridge

M72 Light Anti-Tank Weapon (LAW) (Continued)

Description

The M72 LAW's warhead has excellent penetration ability and lethal after-armor effects. The extremely destructive, shaped-charge explosive penetrates more than 12 inches of armor. Warhead effects are (see diagram below)

- Impact. The nosecone crushes; the impact sensor activates the fuse.
- Ignition. The piezoelectric fuse element activates the electric detonator. The booster detonates, initiating the main charge.
- Penetration. The main charge fires and forces the warhead body into a directional gas jet that penetrates armor plate.
- After-armor effects (spalling). The projectile fragments and incendiary effects produce blinding light and destroy the interior of the target.

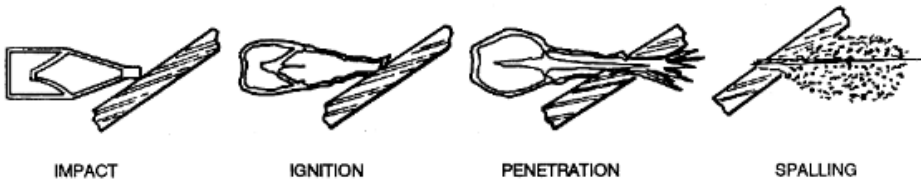

Effects of LAW Warhead

Preparing

The table below lists the steps for preparing the LAW to fire.

Step	Action
0	Inspect the tube for • Cracks • Dents • Bulges
1	Remove the pull pin.
2	Swing the rear cover down.
3	Hold the launcher slightly away from body.
4	Grasp rear sight cover and HOLD FIRMLY.
5	Extend the launcher by pushing out with rear hand. Ensure launcher snaps into "Locked position."
*	In the event the launcher fails to open two times consecutively, set aside for disposal by authorized ammo personnel.
*	WARNING: Extending the weapon too slowly can result in failure to cock the weapon.

Firing

The table below lists the steps to fire the LAW.

Step	Action
1	Rest open rear cover on shoulder.
2	Place sight at easy reading distance.
3	Move safety to “ARM.”
4	Place thumb underneath and hand around tube.
5	Place fingertips on trigger spring boot as far back as possible.
6	Pressing firmly with fingertips, squeeze trigger by depressing trigger spring boot.

Immediate Actions Procedures

If the LAW fails to fire, perform immediate action steps listed in the table below.

Step	Action
1	Re-squeeze the trigger firmly immediately.
2	If the weapon does not fire, keep the launcher on shoulder and push trigger safety handle rearward to the “SAFE” position.
3	Wait one minute before attempting to re-cock the launcher. Maintain weapon orientation down-range.
4	Place back on shoulder, check back blast area, arm, aim, and attempt to fire again.
5	If the weapon fails to fire again, push the trigger safety handle rearward to the “SAFE” position.
6	Wait 10 seconds before placing the launcher on the ground, maintain a downrange orientation. Notify the appropriate ammo personnel immediately to dispose of the weapon system.

M72 Light Anti-Tank Weapon (LAW) (Continued)

Sights & Aiming The LAW's front and rear sights are depicted below:

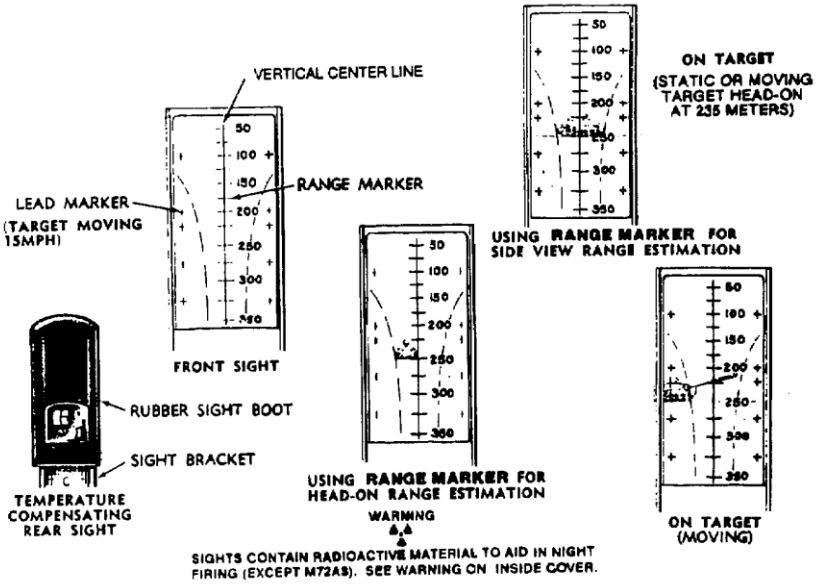

Sight Location and Resemblance to M16 Series Rifle Sights

- Front Sight. The front sight has a sight blade with a center post and left and right lead posts. A semicircular white line helps you obtain the proper sight picture. To open the front sight cover,
  - Press down on it
  - Slide it backward until the sight pops up
- Rear Sight. The rear sight has
  - A sight blade
  - Range adjustment knob
  - Range scale
  - Two peepholes
    - 2mm for normal daylight visibility conditions
    - 7mm for limited visibility conditions

M72 Light Anti-Tank Weapon (LAW) (Continued)

Sighting and Aiming

- The leaf blade that covers the 7-mm peephole has its own tiny 2-mm peephole. To uncover the 7-mm peephole, pull the bottom of the leaf blade out slightly and rotate it right and up. To cover the 7-mm peephole, rotate it back down and ensure the leaf blade is seated. The range indicator scale is indexed from 100 to 500 meters in 50-meter increments.
- To increase the range setting beyond 200 meters, turn the range adjustment knob clockwise or vice versa (see diagram on next page).
- NOTE: Remember to reset the range to 200 meters when you close the rear sight. Otherwise, closing the sight cover will break off the rear sight.

Aiming procedures include:

- Placing the eye correctly
- Obtaining a sight picture
- Aligning the sight

Combining these procedures is critical to correctly aiming light anti-armor weapons.

- Eye placement. Before sighting the weapon, estimate the range. Place your firing eye 2 1/2 to 3 inches from the rear sight.

  - CAUTION: Do not place your eye any nearer than 2 1/2 inches from the rear sight to prevent possible injury from the weapon's recoil and to correctly align the sight on the LAW.

- Sight alignment. Position the rear sight so that the white semicircle of the front sight is a hazy line around the bottom half of the rear sight opening. Position the front sight posts on the target (see diagram on next page). Align the sight by moving your head forward or backward.

Sight Alignment (Continued)

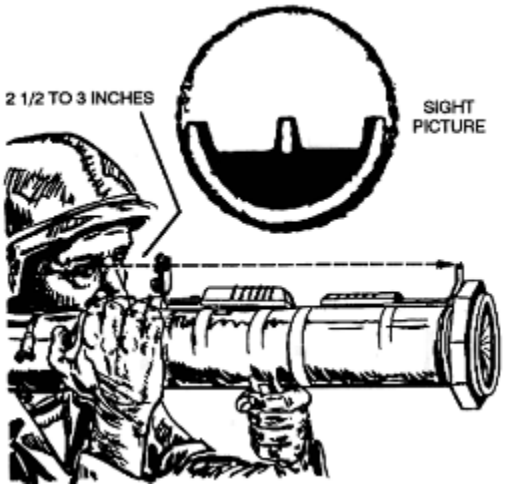

Sight Alignment

Sight picture. Position the front sight on the target as described below. Stationary target, including those moving directly toward or away from the firer

- Adjust the rear sight for the correct range
- Place the center sight post in the center of the target (see diagram below)

Sight Picture: Stationary Targets

M72 Light Anti-Tank Weapon (LAW) (Continued)

- Slow-moving vehicles. Estimated speed of 10 mph or less. Moving in an oblique direction.
  - Place the center sight post on the front or leading edge of the vehicle (see diagram on next page)

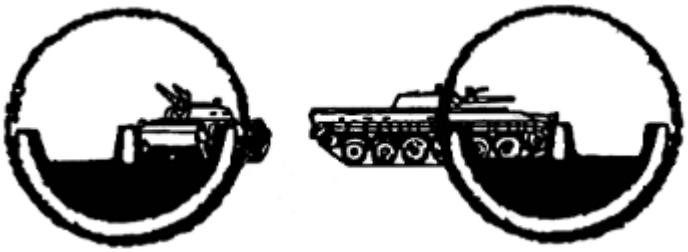

Sight Picture: Slow-Moving Targets

- Fast-moving vehicles, moving faster than 10 mph
  - Place either the left or right lead post on the center of the target.
  - For example, the target is moving from left to right, place the left lead post on the target's center of mass, and vice versa (see diagram below)

Sight Picture: Fast-Moving Targets

M72 Light Anti-Tank Weapon (LAW) (Continued)

Method of Target Engagement

The four engagement methods are

- Single
- Sequence
- Pair
- Volley firing

The leader evaluates the situation on the ground to determine which method to use. Regardless of whether they are used singly or in combination, communications are vital. The methods of engagement are rehearsed IAW unit SOP

- Single Firing. Although single firing is not the preferred method of engagement, a single Marine with one light anti-armor weapon may engage an armored vehicle. Several light anti-armor weapons are required to kill an armored vehicle. A single firer firing one round must hit a vital part of the target to damage it at all (see picture on next page).

Single Firing

Single Firing (Continued)

- When a single firer
  - Does not **know the actual range, the firer should engage only targets within 200 meters.** The probability that he will hit a target beyond 200 meters with a single round is small.

- Sequence firing. In sequence firing, a single firer, equipped with two or more light anti-armor weapons prepared for firing, engages the target. After engaging with the first round and observing the impact, the firer adjusts the point of aim, engages with another round, and so on until the target is destroyed or the firer runs out of rounds (see picture below).

M72 Light Anti-Tank Weapon (LAW) (Continued)

Sequence Firing

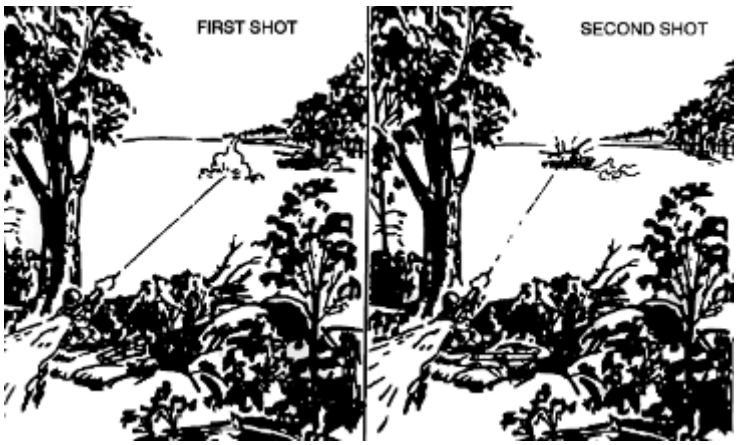

Sequence Firing

- Pair Firing. In pair firing, two or more firers, equipped with two or more light anti-armor weapons prepared for firing, engage a single target. Before firing, the first firer informs the others of the estimated speed and distance to the target. If the impact of that round proves the estimate to be

  - Correct, the other firers engage the target until it is destroyed
  - Incorrect, the second firer informs the others of a new estimate and then engages the target

- This process continues until the target is destroyed or all rounds are expended (see picture below).

Pair Firing

- Volley Firing. The best method of engagement with a light anti-armor weapons is volley firing; when the range to a single target is known, two or more firers engage it at one time on a prearranged signal such as a command, whistle, booby trap, mine, or TRP. Volley firing is the best method of engagement with a light anti-armor weapon because it places the most possible rounds on one target at one time, increasing the possibility of a kill (see picture on next page).

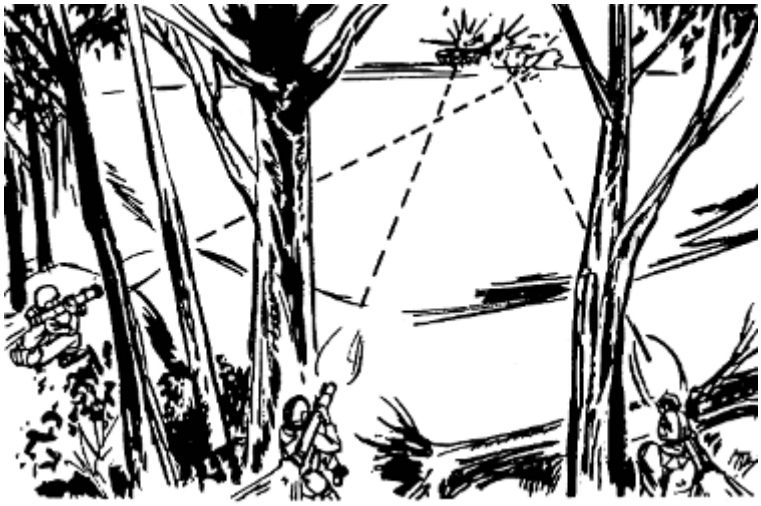

Volley Firing

Communications Leaders control all unit fire and communicate this information to the entire unit according to the unit SOP. Light anti-armor weapons firers must know the:

- Designated firers

Communications (Continued)

- Target priority
- Method of engagement
- Range and lead to target (if known)
- Command or signal to:
  - Fire
  - Cease fire

Firing Positions The diagrams on the following page show the four firing positions:

- Kneeling
- Standing
- Sitting
- Prone

Kneeling

Standing

Firing Positions (Continued)

Sitting

Top View Side View

Prone

M249 Light Machinegun

History

The M249 light machinegun 5.56mm is a result of a Marine Corps and Army development program to provide combat units with an automatic weapon of extended range and greater accuracy than the Browning automatic rifle. Fabrique Nationale of Herstal, Belgium developed the M249 in 1974 after the Defense Department announced its requirement for a light, automatic weapon to supplement the firepower of the 5.56mm M16A2 rifle.

In the Marine Corps, combat, combat service support, and combat support units as well as Marine Corps security forces use the M249. Previously, in Marine infantry battalions, the M249 was found in each fire team, manned by the automatic rifleman (totaling nine per rifle platoon). With the introduction of the M27 Infantry Automatic Rifle, the M249 has since been designated to a more traditional machinegun role, to be employed at the commander's discretion as a light machinegun.

The M249 has recently been upgraded to modify a few selected parts of the weapon. Where feasible, these modifications have been explained in this handout. Those modifications not explained in this handout will be noted, and the appropriate pages in the new operator's manual (TM 08671A-10/1A with change A) will be referenced.

Description

The M249 is a gas-operated, belt/magazine-fed, air-cooled, automatic, shoulder-fired weapon. Like the M240B machinegun, the M249 fires from the open-bolt position. It can fire ammunition from an M16 magazine as well as from a linked belt. Utilizing M855/SS109 ammunition, the M249 provides the Marine Corps with a light automatic weapon capable of providing increased firepower and much greater effective ranges over threat weapons of similar caliber.

.

Characteristics

	M-249	
Length of Barrel	1.035 m	40.75in
Weight (Un-Loaded)	7.72kg	17.00lbs
Weight 200 rd w/drum	3.14kg	6.92lbs
Weight (Loaded) w/drum	10.86kg	23.92lbs

Capabilities

Maximum Range:	3600m
Point Target	800m
Area Target	1000m
Grazing Fire	600m
Tracer Burnout	900m

Ammunition

The M249 uses several different types of 5.56-mm standard military ammunition. Only authorized ammunition that is manufactured to US and NATO specifications should be used (see diagram below).

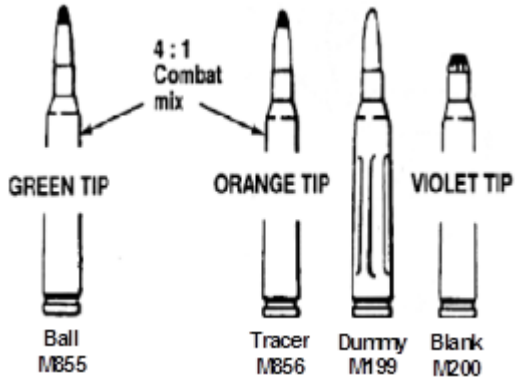

Cartridge, 5.56-mm ball M855 (DODIC A059) The M855 cartridge has a gilding, metal-jacketed, lead alloy core bullet with a steel penetrator. The primer and case are waterproof. A disintegrating metallic split-linked belt links the ammunition for firing from the ammunition box. In an emergency, the M855 round can also be loaded and fired from the M16 20- or 30-round magazine. The M855 round:

- Is identified by a green tip
- Has a projectile weight of 62 grains
- Is 2.3 cm long
- Is the NATO standard round
- Is effective against personnel and light materials, not vehicles

Cartridge, 5.56-mm tracer, M856 (DODIC A063) The M856 cartridge is used for adjustments after observation, incendiary effects, and signaling. When tracer rounds are fired, they are mixed with ball ammunition in a ratio of four ball rounds to one tracer round. The DODIC for ball and tracer mix is A064.

- Has a 63.7-grain bullet without a steel penetrator
- Is identified by an orange tip

Cartridge, 5.56-mm dummy MI99 (A060) The M199 cartridge can be identified by the six grooves along the side of the case beginning about one-half inch from its head. It contains no propellant or primer. The primer well is open to prevent damage to the firing pin. The dummy round is used during

- Mechanical training
- Dry-fire exercises
- Function checks

Cartridge, 5.56-mm blank M200 (M2 link, A075) The blank cartridge has no projectile. The case mouth is closed with a seven-petal rosette crimp and has a violet tip.

The original M200 blank cartridge had a white tip. Field use of this cartridge resulted in residue buildup, which caused malfunctions. Only the violet-tipped M200 cartridge should be used. The blank round is used during training when simulated live fire is desired. An M15A2 blank-firing attachment must be used to fire this ammunition

Components

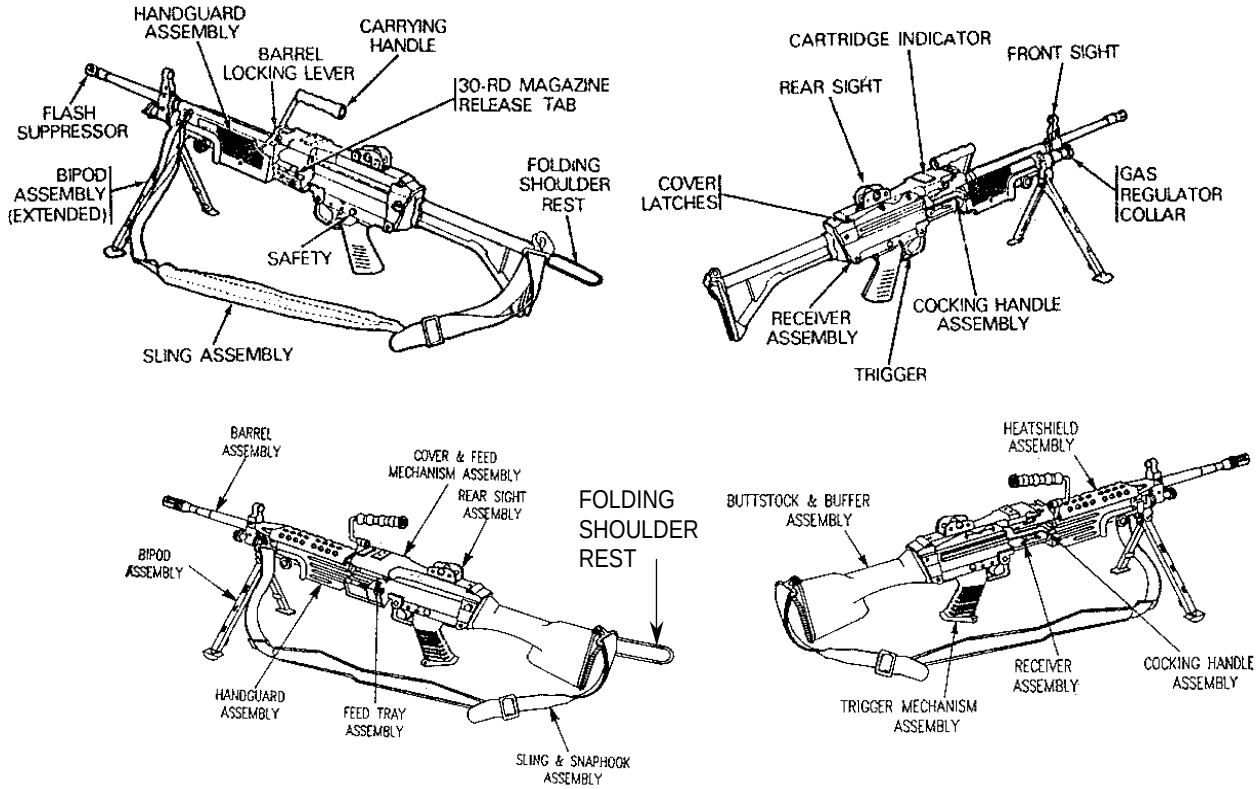

Location of Major Components. The table below identifies the M249 major components in the diagram on the following page.

1. Barrel	8. Cocking Handle	15. Trigger mechanism assembly
2. Heat shield	9. Buffer and butt stock assembly	16. Hand guard
3. Receiver assembly	10. Bolt assembly	17. Sling and snap hook assembly
4. Rear sight assembly	11. Slide assembly	18. Bipod assembly
5. Cover and feed mechanism assembly	12. Piston assembly	19. Gas cylinder
6. Feed pawl assembly	13. Drive spring	20. Gas collar
7. Feed tray assembly	14. Operating rod	21. Gas regulator

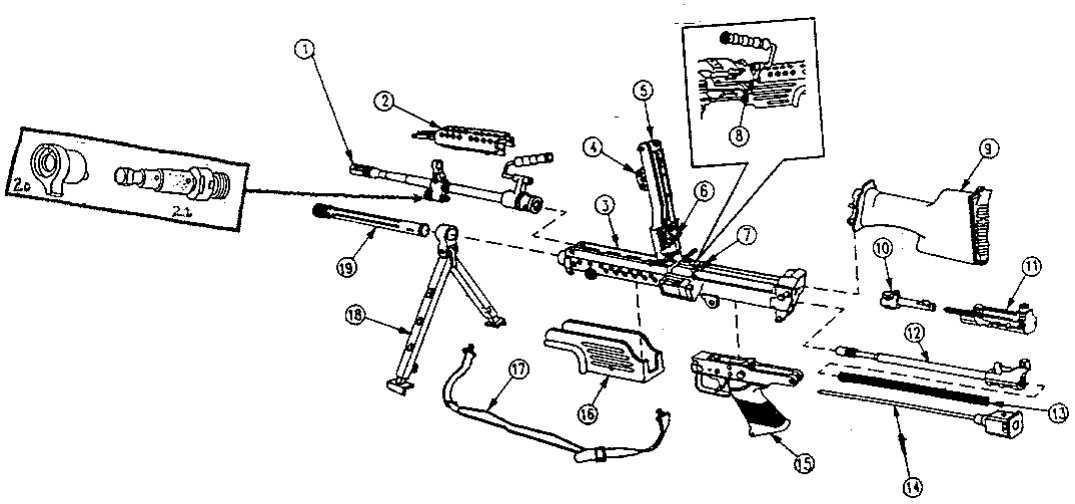

Clearing the M249

Prior to handling any weapon, ensure that it is not loaded. Follow the steps in the table below to clear the M249 in accordance with TM 08671A-10/1A with change A.

STEP 1

Pull the cocking handle to the rear (palm up) and lock the bolt to the rear. Maintain positive control of the cocking handle (see diagram on next page).

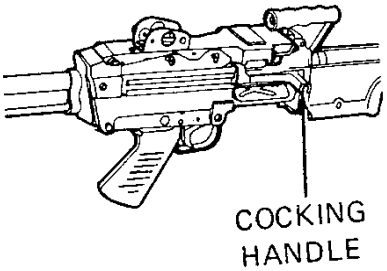

Step 2
Push the safety from left (loading side) to right (ejection side). Red should *not* be visible on the safety (see diagram below).

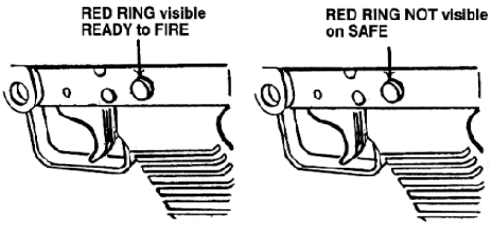

Step 3

If the weapon has been firing

- Belted ammunition, raise the feed cover assembly and remove the belted ammunition (see diagram below)

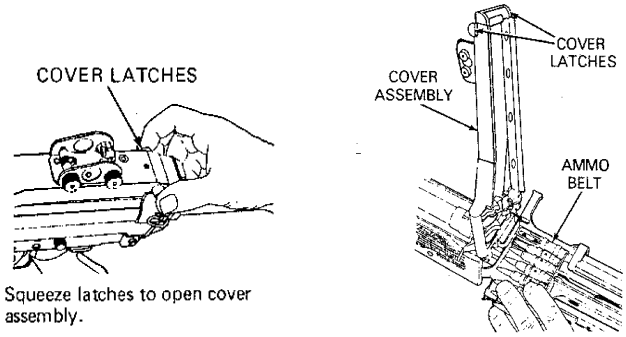

- From a magazine, depress the magazine release tab and remove the magazine (see diagram below) and raise the feed cover assembly

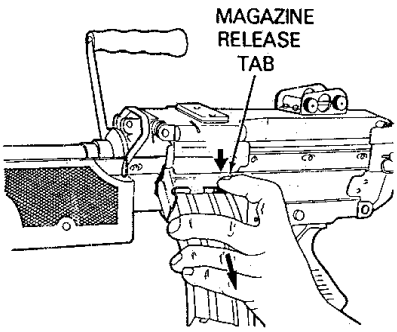

Step 4

Conduct the **FIVE-POINT SAFETY CHECK** for brass, links, or ammunition.

1. Check the feed pawl assembly under the feed cover.
2. Check the feed tray assembly.
3. Lift the feed tray assembly and inspect the chamber (visually and physically).
4. Check the space between the bolt assembly and the chamber (visually and physically).
5. Insert two fingers of the left hand into the magazine well to extract any ammunition or brass.

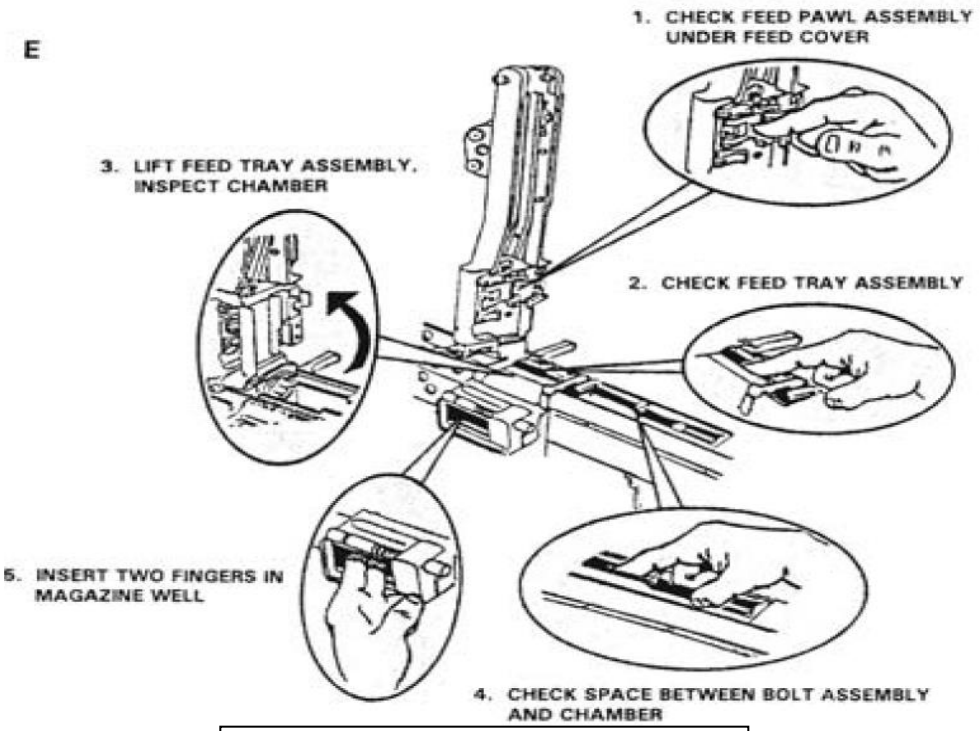

CAUTION

Brass or links in the magazine well may cause stoppages.

Step 5

When the chamber and receiver are clear, close the feed cover assembly and lock it.

Step 6

Push the safety from right to left (red now visible).

Step 7

While maintaining control of the cocking handle, press the trigger and ease the bolt forward by manually riding the cocking handle forward.

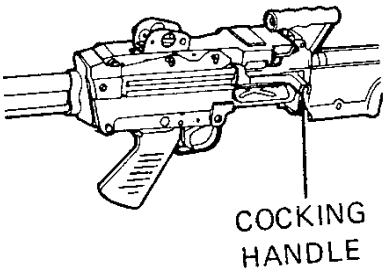

Disassembling the M249

Disassembly for the M249 consists only of field stripping for first echelon (operator) maintenance. Operators are not authorized to use any tools other than authorized cleaning gear to disassemble the weapon. When disassembling the M249, lay parts out from left to right or right to left in the order disassembled so that the weapon can be easily reassembled in reverse order.

The steps to disassemble the M249 are in the listed on the following pages.

NOTE: In the procedure below, if you do not have a cleaning rod available, you may use the operating rod instead.

Be sure the weapon is in Condition 4 (see page 19 of this student handout) before disassembling it.

Step 1

After ensuring that the weapon is clear, pull the upper retaining pin at the rear of the receiver to the left and allow the buffer and butt stock assembly to pivot downward (see diagram below).

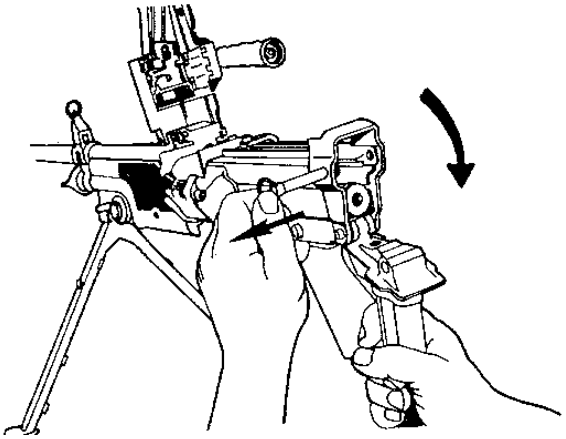

Buffer and butt stock assembly rotated downward.

Step 2
Remove the operating rod assembly from the receiver by pressing inward and up on the rear of the operating rod with one thumb. Slowly let the drive spring expand and remove it from the receiver. Separate the drive spring and operating rod (see diagram below).

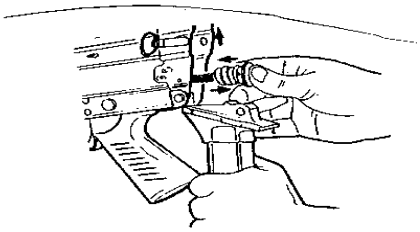

Step 3
Remove the buffer and butt stock assembly from the receiver by pressing the lower retaining pin from the right to the left (see diagram below).

NOTE: Notice that the pin can be pressed outward far enough to let the stock fall free but can still hold the trigger mechanism assembly in place; this is important for assembly.

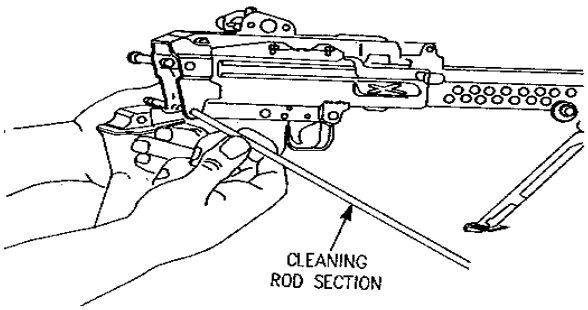

Step 4
Pull the lower retaining pin to the left as far as possible (pin will not completely clear the receiver), and remove the trigger mechanism assembly by pulling downward and to the rear on the handgrip (see diagram below).

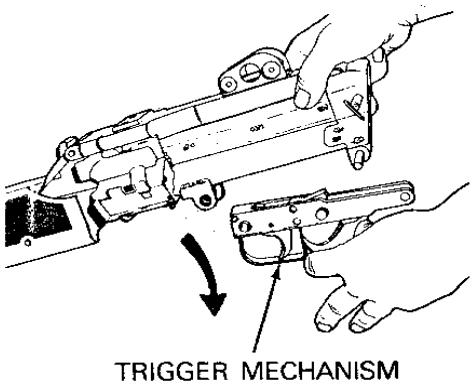

Step 5

To remove the piston, bolt, and slide assemblies, pull the cocking handle to the rear. Finish pulling the piston, bolt, and slide assemblies to the rear with finger pressure and pull them from the rear of the receiver (see diagram below).

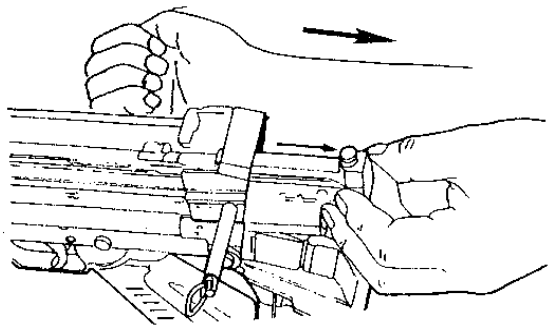

Step 6

Separate the bolt from the slide assembly by rotating it counterclockwise (looking at the face of the bolt) and pulling it forward (see diagram below).

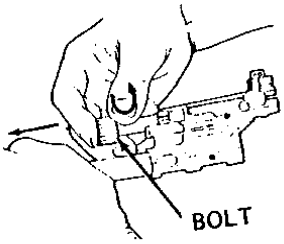

<u>CAUTION</u>: When bolt is removed, the firing pin spring is free; be careful not to lose it.

Step 7

To separate the slide assembly from the piston, press the retaining pin from the right to the left. Once the pin is shifted, lift the slide assembly upward from the piston. The operating rod may be used to help press the retaining pin (see diagram below).

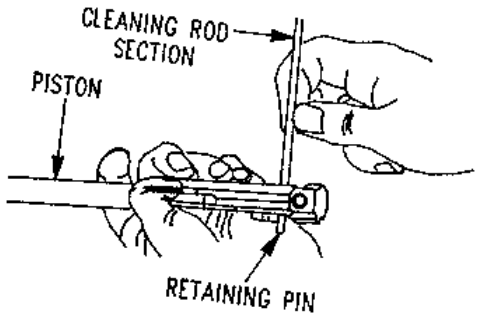

Step 8

To remove the barrel from the receiver (see diagram below),

- Close the cover and feed mechanism assembly
- Depress the barrel-locking lever with your left hand
- Lift the carrying handle using your right hand
- Push the barrel forward

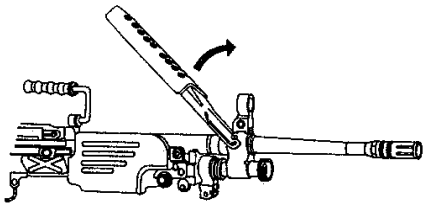

Step 9

To remove the heat shield, hold the weapon firmly, grasp the heat shield just forward of the barrel handle, and lift the heat shield off the barrel (see diagram below).

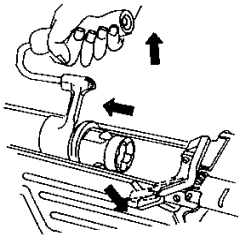

CAUTION: Barrels must not be interchanged with those from other M249s unless direct support personnel have certified the headspace for that weapon.

Step 10

Remove the gas regulator from the barrel by positioning the regulator lever between normal and maximum (lever pointing downward away from barrel). With the new barrel, position the gas collar to allow the scraper tool to be installed. Place the tip of the scraper tool in the notch in the front left of the gas block. Holding the tip of the scraper tool in this position, rotate the collar detent up and over the tip and onto the top of the gas block (see diagram below).

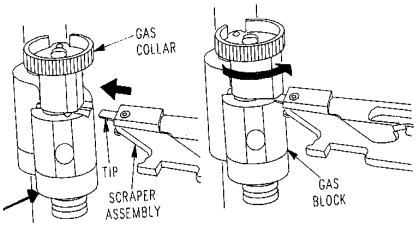

Pull forward on the gas collar and separate it from the gas block (see diagram below).

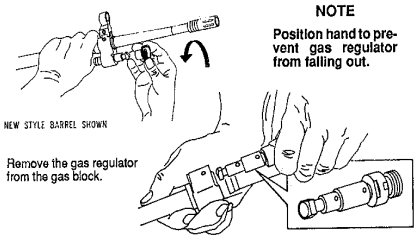

Step 11

Remove the hand guard by pressing the retaining pin from right to left with the operating rod. (The pin will not separate completely from the handguard.) Pull down on the rear of the handguard and separate it from the receiver (see diagram below).

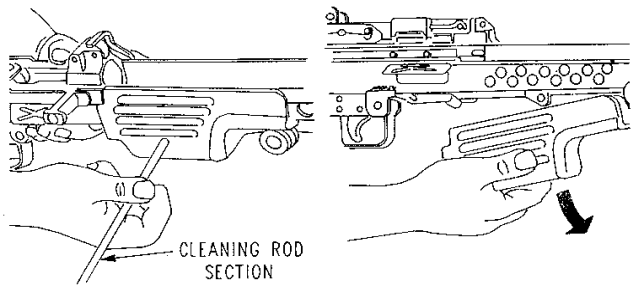

Step 12

Remove the bipod and gas cylinder by turning the gas cylinder to the left or right until you hear a click. Pull the gas cylinder forward and separate it from the bipod (see diagram below).

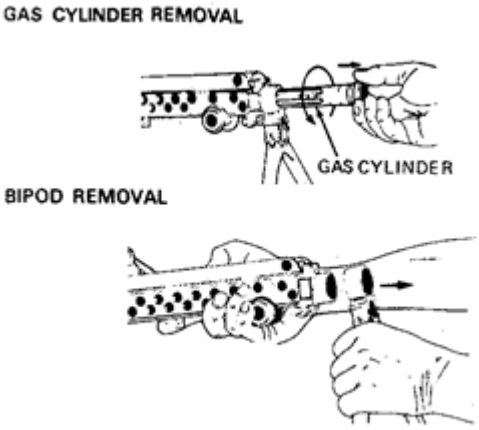

Assembling the M249

Assembly. To reassemble the M249, reverse the disassembly procedures. The following details are important in reassembling the weapon:

- Ensure that the bipod yoke is placed on the end of the receiver, big opening first.
- When re-inserting the gas cylinder into the receiver, some manipulation will be required with the fingers of the free hand to get the base of the cylinder to line up with the receiver. Be sure to turn the gas cylinder until it clicks and is locked in place.
- When replacing the trigger assembly, push the retaining pin inboard just far enough to catch and hold the trigger assembly in place. If you push it too far, you will block the stock recess, and you cannot put the buffer and butt stock assembly in place until the pin is pulled outward.
- When reassembling the gas regulator, ensure that the lug on the rear of the regulator lines up with the lug on the rear of the gas block. Place the gas regulator collar over the front of the gas regulator and align the tapered lug of the regulator with the tapered recess of the collar. Hold the rear of the regulator, press down on the regulator collar, rotate the collar clockwise, and lock it in place. The new collar follows the same procedures. Refer to the TM for additional information on the upgraded M249 (new TM page 3-53).
- When placing the piston, bolt, and slide assemblies in the receiver, be sure that the slide recesses on the sides of the slide assembly are aligned with the slide rails of the receiver.
- See the TM for the proper procedures to install the drive spring and operating rod for the upgraded M249 (new TM page 3-61).
- See TM for the proper procedures to install the heat shield for the upgraded M249 (new TM page 3-63).

Function Check. After assembly has been completed, you must perform a function check. Remember that function checks are only to check proper reassembly procedures. Function checks are not meant to take the place of actual live fire operational tests to be done before movement if the tactical situation permits. Follow the steps below to perform M249 function checks.

Step 1

Grasp the cocking handle with the right hand, palm up, and pull the bolt to the rear locking it in place.

Step 2

While continuing to hold the resistance on the cocking handle, use the left hand to move the safety to the SAFE position.

Step 3

Pull the trigger. (The weapon should not fire.)

Step 4

Move the safety to the FIRE position.

Step 5

While continuing to hold resistance on the cocking handle, use the left hand to pull the trigger and ease the bolt forward to prevent it from slamming into the chamber area and damaging the face of the bolt.

Step 6

If the weapon fails the function check, check for missing parts or the reassembly procedures. (Before disassembling the weapon, make sure it is positioned where the guide rod and spring cannot cause bodily harm if the bolt is locked to the rear.)

CAUTION: The bolt must be eased forward to prevent damage to the cover and feed mechanism assembly and operating rod group.

NOTE: The cover and feed mechanism assembly can be closed with the bolt in either the forward or the rearward position.

Cycle of Function

The table on the following page lists the sequence for the cycle of functioning of the M249 light machinegun

Cycle of Function	Description
Feeding	Feeding takes place as the operator places a belt of ammunition on the feed tray or inserts a loaded magazine in the magazine well. Whichever method is used, the results are the same. A cartridge is placed in the path of the bolt so that as the bolt is driven forward from the force of the expanding driving spring, the face of the bolt makes contact with the rim of the first cartridge and strips it from the links or magazine. As the bolt continues forward, the cam roller on top of the bolt forces the feed cam, in the cover assembly, to the left positioning the feed pawl over the next cartridge to be chambered. When the burning gases of the fired cartridge cause the bolt to move to the rear, the feed cam lever and feed pawl are forced to the right causing the next round in the feed tray to be pulled to the right and placed in the feed tray groove ready for chambering.
Chambering	Chambering occurs as the bolt continues to move forward and forces the cartridge into the barrel chamber.
Locking	Locking occurs as chambering takes place. The locking lugs of the bolt pass through the locking recesses cut into the chamber. When the locking lugs and bolt face make contact with the rear of the chamber, the forward movement of the bolt stops. The slide assembly pushes the rotating lug of the bolt to the right. This rotation of the bolt causes the locking lugs to disalign with the locking recesses, and locking takes place.
Firing	After locking has occurred the piston and slide assemblies continue forward slightly. This forward movement ends when the slide assembly forces the firing pin through the face of the bolt. The firing pin then strikes the primer of the cartridge, and firing takes place.

Cycle of Function (Continued)

Cycle of Function	Description
Unlocking	Unlocking begins when expanding gases from the ignited propellant are vented off through the gas port in the gas regulator. The pressure of the expanding gases is directed rearward through the gas cylinder and forces the piston assembly, slide assembly, and bolt to the rear. As the slide assembly moves to the rear, the camming recess forces the camming lug of the bolt to the left causing the locking lugs on the bolt to align with the locking recesses in the chamber. The slide assembly continues to move to the rear, and the bolt is withdrawn from the chamber.
Extracting	The extraction claw on the face of the bolt grips the cartridge case tightly by engaging the extraction groove. Thus, as the bolt moves rearward, the cartridge case is pulled from the chamber.
Ejecting	The extractor claw grips the lower right portion of the cartridge rim. As the spent casing or cartridge is pulled to the rear, the ejector strikes the upper left of the base of the cartridge, just as the bolt face clears the rear of the ejection port, causing the cartridge case to pivot over the extraction claw and to be thrown clear of the receiver through the ejection port.
Cocking	As the bolt continues its movement to the rear, the piston assembly compresses the drive spring. Cocking is completed when the spring is fully compressed, just before it begins to expand and drive the operating parts forward again.

Handling the M249 Light Machinegun

Condition Codes. The table below describes the condition codes for the M249 light machinegun.

Condition	Description
1	• Ammunition in position on feed tray or magazine inserted • Bolt locked to the rear • Safety on
2	Not applicable to the M249
3	• Ammunition in position on feed tray or magazine inserted • Chamber empty • Bolt forward • Safety off
4	• Feed tray clear of ammunition (magazine removed) • Chamber empty • Bolt forward • Safety off

Unloading. To execute the command, "UNLOAD," taking the weapon from Condition 1 to Condition 4, follow the steps in the table below.

Step	Action	
	Belt-Fed Technique	**Magazine-Fed Technique**
1	Ensure the bolt is locked to the rear and the weapon is on safe. Maintain positive control of cocking handle.	Ensure the bolt is locked to the rear and the weapon is on safe. Maintain positive control of cocking handle.
2	Open the feed cover.	Remove the magazine from the weapon and retain it on your person.
3	Remove all ammunition and belt links.	Open the feed cover.
4	Conduct five-point safety check for brass, links, or ammunition.	Conduct five-point safety check for brass, links, or ammunition.
5	Take the weapon off SAFE.	Take the weapon off SAFE.
6	While maintaining control of the cocking handle, pull the trigger and ease the bolt forward to the closed position.	While maintaining control of the cocking handle, pull the trigger and ease the bolt forward to the closed position.
7	Close the feed cover.	Close the feed cover.

Loading. To execute the command, "LOAD," taking the weapon from condition 4 to condition 3, follow the steps in the table below.

Step	Action	
	Belt-Fed Technique	**Magazine-Fed Technique**
1	Ensure the weapon is condition 4.	Ensure the weapon is condition 4.
2	Attach a 200-round box of ammunition to the underside of the receiver. **NOTE:** The underside of the receiver has a dovetail locking recess that will accept the dovetail lug on the ammo box.	Withdraw the magazine from the magazine pouch.
3	Align the recess and lugs; push them together until they lock.	Check the top of the magazine to ensure it is loaded.
4	Pull outward on the ammo box to ensure that it is locked in place.	Insert the magazine into the magazine well and push inward until the magazine latch clicks
5	Locate the green belt tab on the top of the ammo box and pull up on it. **NOTE:** The belted ammo is affixed to this tab and will be pulled from the ammo box.	Tug downward on the magazine to ensure that it is held in the weapon by the magazine catch.
6	Open the feed cover and place the belt of ammunition on top of the feed tray with the open side of the links facing downward. **NOTE:** Place the first round against the cartridge stop. Place the belt tab to the right of the cartridge stop.	Close the magazine pouch.
7	Hold the belt in place; shut the feed cover making sure it locks in place.	If the bolt is forward (weapon can be loaded with the bolt closed or open), pull the cocking handle to lock the bolt to the rear and push the cocking handle forward until it clicks.
8	If the bolt is forward (weapon can be loaded with the bolt closed or open), pull the cocking handle to lock the bolt to the rear and push the cocking handle forward until it clicks.	Place the weapon on SAFE.
9	Place the weapon on SAFE.	

Make Ready. To execute the command, “MAKE READY,” taking the weapon from condition 3 to condition 1, follow the steps in the table below.

Step	Action
1	Pull the cocking handle fully to the rear.
2	Push the cocking handle fully forward to the locked position.
3	Place the weapon on SAFE.

***NOTE:** The preferred method of "MAKE READY" is to go from condition 4 directly to condition 1, skipping condition 3 and minimizing damage to the weapon that is caused by placing ammunition on the feed tray with the bolt forward. Condition 3 has tactical viability and should be used only when the situation dictates. To go directly to condition 1 from condition 4, the command, "MAKE READY," is given, skipping the command, "LOAD."

To execute the command, “MAKE READY,” taking the weapon from condition 4 directly to condition 1, follow the steps in the table below.

Step	Action	
	Belt-Fed Technique	**Magazine-Fed Technique**
1	Ensure weapon is in condition 4.	Ensure weapon is in condition 4.
2	Pull cocking handle fully to the rear.	Pull cocking handle fully to the rear.
3	Push cocking handle fully forward to the locked position.	Push cocking handle fully forward to the locked position.
4	Place the weapon on SAFE.	Place weapon on SAFE.
5	Attach a 200-round box of ammunition to the underside of the receiver. **NOTE:** The underside of the receiver has a dovetail locking recess that will accept the dovetail lug on the ammo box.	Withdraw the magazine from the magazine pouch.
6	Align the recess and lugs; push them together until they lock.	Check the top of the magazine to ensure it is loaded.
7	Pull outward on the ammo box to ensure that it is locked in place.	Insert the magazine into the magazine well and push inward until the magazine latch clicks
8	Locate the green belt tab on the top of the ammo box and pull up on it. **NOTE:** The belted ammo is affixed to this tab and will be pulled from the ammo box.	Tug downward on the magazine to ensure that it is held in the weapon by the magazine catch.
9	Open the feed cover and place the belt of ammunition on top of the feed tray with the open side of the links facing downward. **NOTE:** Place the first round against the cartridge stop. Place the belt tab to the right of the	Close the magazine pouch.

	cartridge stop.	
10	Hold the belt in place; shut the feed cover making sure it locks in place.	

Firing. To execute the command, “FIRE,”

Step	Action
1	Take the weapon off SAFE.
2	Place finger on trigger.
3	Aim in on target and engage target.

Unload/Show Clear. To execute the command, “UNLOAD, SHOW CLEAR,” taking the weapon from Condition 1 to Condition 4, follow the steps in the table below.

Step	Action	
	Belt-Fed Technique	**Magazine-Fed Technique**
1	Pull the cocking handle and lock the bolt to the rear. Maintain positive control of cocking handle.	Pull cocking handle to rear. Maintain positive control of cocking handle.
2	Put the weapon on SAFE.	Put the weapon on SAFE.
3	Open the feed cover.	Remove the magazine from the weapon and retain it on your person.
4	Remove all ammunition and belt links.	Open the feed cover.
5	Conduct five-point safety check for brass, links, or ammunition.	Conduct five-point safety check for brass, links, or ammunition.
6	Have a second individual inspect the chamber to ensure no ammunition is present.	Have a second individual inspect the chamber to ensure no ammunition is present.
7	Take the weapon off SAFE.	Take the weapon off SAFE.
8	While maintaining control of the cocking handle, pull the trigger and ease the bolt forward to the closed position.	While maintaining control of the cocking handle, pull the trigger and ease the bolt forward to the closed position.
9	Close the feed cover.	Close the feed cover.

CAUTION: After a live-fire exercise with the M249 light machinegun, *all* M249s should be broken down so that the

- Operating rod assembly and piston assembly are removed
- Receiver is visually and physically inspected for rounds that may have lodged there during firing
- Magazine well is inspected for live rounds or empty casings.

M249 Aiming Stakes. Guidelines for using aiming stakes (see diagram below) are listed below.

- When the bipod legs are utilized, do *not* emplace a yoke stake. Dig a trench 4 to 6 inches deep for the bipod.
- Emplace right and left sector stakes near the stock of the weapon. Position the sector stake to the right further forward near where the ammunition drum is located to prevent any obstruction to the firing hand.
- Use a shorter stake as a PDF stake. The pistol grip will rest on the stake to ensure proper direction and elevation.

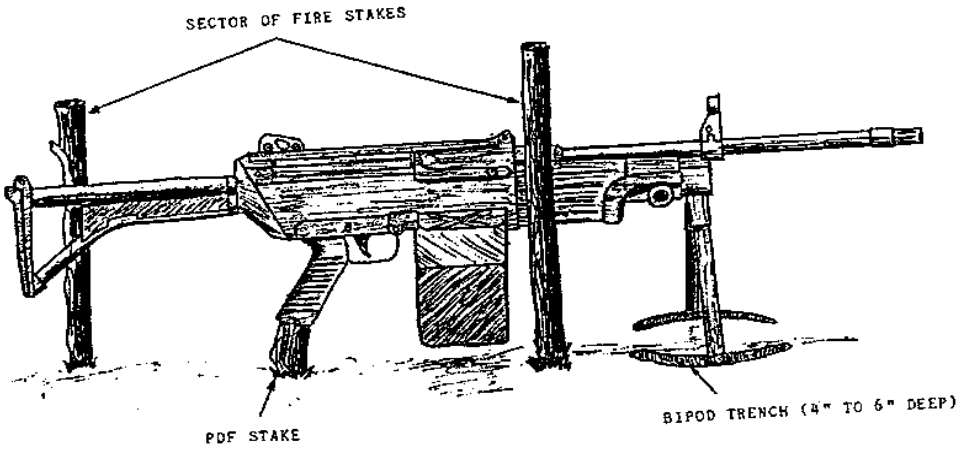

Changing the Barrel

Rates of Fire.

Sustained rate	85 rds/min
Rapid rate	200 rds/min
Cyclic rate	850 rds/min

Changing the Barrel. Each M249 has two barrel assemblies in order to extend the life of the barrels, retain accuracy, and allow for continuous firing over long periods of time. Changing barrels is not restricted to only hot barrel conditions. The table below describes common conditions that require a barrel change.

Hot barrel	200 rds or more in two minutes or less (any rate of fire)
Sustained rate	500 rds fired within ten minutes
Rapid rate	200 rds fired within two minutes
Cyclic rate	850 rds fired within one minute

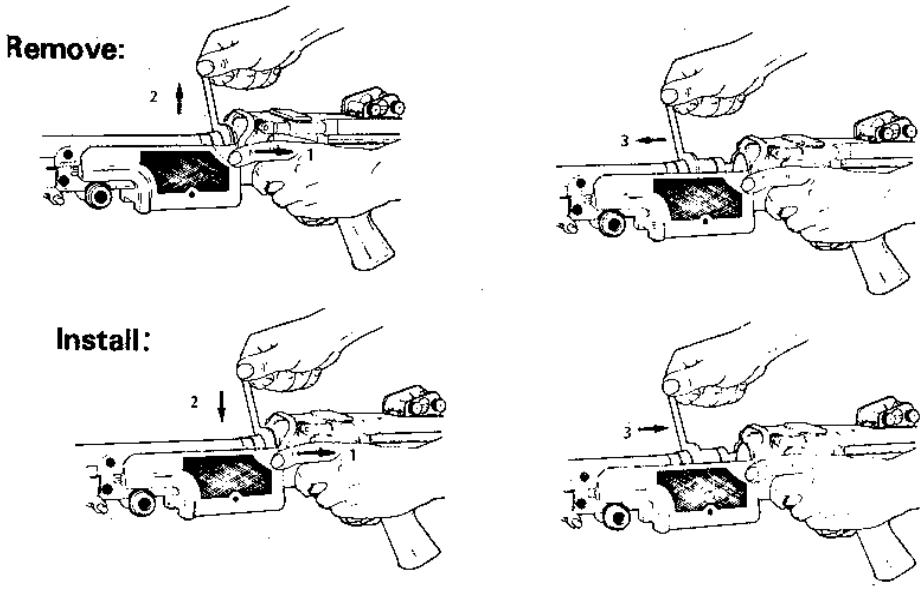

Step 1

Be sure that the bolt is not forward (the locking lugs will be engaged in the locking recesses of the chamber, making removal/installation impossible).

Step 2

Clear the weapon, but leave the bolt locked to the rear.

Step 3

Put the weapon on SAFE.

Step 4

Depress the barrel locking lever, grasp the barrel handle with the other hand, and pull forward and up on the barrel to remove it from the receiver.

Step 5

Handle the barrel carefully and avoid touching it.

Step 6

Install the cool barrel in the reverse order; be sure it is locked in place before attempting to fire.

Zeroing Procedures

Mechanical Zero. Before field zeroing, you must set mechanical zero on the sights of the weapon. The table below lists the steps to set mechanical zero.

Step	Action
1	Rotate the windage knob (front knob, see diagram below) until the sight aperture is all the way to the left or right. 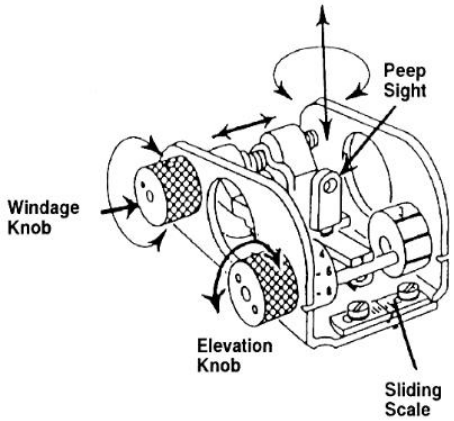
2	While counting the number of clicks, rotate the knob all the way back until the sight aperture is on the other side.
3	Divide the number counted in Step 2 by two.
4	Count back the number of clicks calculated in Step 3. NOTE: For example, say you counted 24 clicks from full right windage to full left windage. Then mechanical zero is 12; 24 divided by 2. You would count back 12 clicks from full left windage
5	Rotate the rear sight aperture (using the elevation knob, see diagram below) clockwise until it will not turn any further. 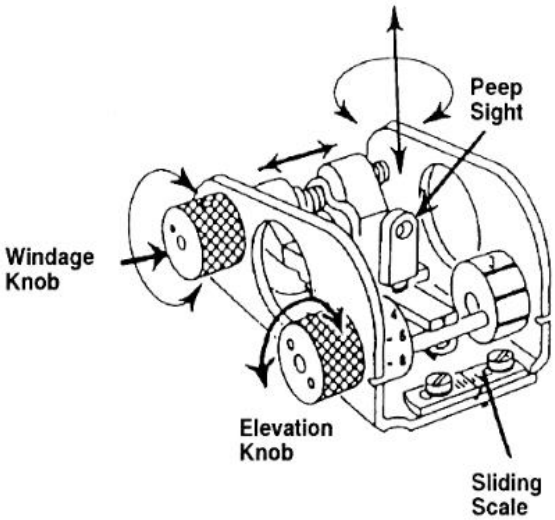

6	While counting the number of rotations, rotate the aperture counterclockwise until it stops.
7	Divide the number counted in Step 6 by two.
8	Rotate the aperture clockwise the number of clicks calculated in Step 7.
9	Mechanical zero is now set for both windage and elevation

Field Zero. The table below lists the steps to follow to field zero the M249.

Step	Action
1	Place a range setting of 300m on the rear sight elevation scale.
2	With mechanical zero set, fire a 3- to 5-round burst at a target 300m away.
3	Adjust the rear sight for windage and elevation until the impact of the burst is centered on the target. NOTE: Do *not* use the elevation adjustment knob to correct elevation. To correct elevation, rotate the rear sight aperture in the desired direction: • Clockwise to lower the impact of the burst • Counterclockwise to raise the impact of the burst When adjusting both the windage knob and rear sight aperture, one click moves the burst two inches for every *100m* of range.

NOTE: The weapon can be zeroed at any range as long as the range set on the rear sight elevation scale corresponds with the actual range to the target. The table below shows at various distances what one click moves the strike.

Distance from Target (in meters)	One click moves the strike…	
	In Centimeters	In Inches
100	5	2
200	10	4
300	15	6
400	20	8
500	25	10
600	30	12
700	35	14
800	40	16
900	45	18

Grenades

There are several types of hand grenades. Each has different characteristics and each provides the Marine with a variety of capabilities. Hand grenades give the Marine the ability to kill the enemy, destroy enemy equipment, give signals, and control riots. It is the Marine's personal indirect fire weapon system.

Common Characteristics

- Short range. The range of a hand grenade depends entirely on the individual and the type of grenade being utilized. The average individual can throw the grenade from 30 to 40 meters.

- Small effective casualty radius**.** Effective casualty radius is defined as the radius around the point of detonation where a minimum of 50% of the personnel exposed in that area becomes casualties. The casualty radius of a hand grenade depends upon the type of grenade. High explosive grenades such as the M67 fragmentation grenade have a 15 meter effective casualty radius.
- Delay element in the fuse**.** All grenades have a delay element in their fuse permitting the user to find cover while employing the grenade. The time varies with the type of grenade being used.

Parts of a Grenade

- Body. The body of the grenade functions as a container and may be made of metal, fiber, or plastic. The body also provides fragmentation in some grenades.
- Filler**.** The filler is the chemical or explosive substance contained in the body. The filler gives the grenade its explosive characteristic and determines its function.
- Fuse Assembly**.** The heart of the grenade is the fuse assembly. It causes the grenade to function by means of a chain reaction through pyrotechnic, mechanical, or electrical means. All fuses in US hand grenades may be categorized as either detonating or igniting.

  - Detonating. Detonating fuses explode within the grenade body to initiate the main explosion of the filler substance.
  - Igniting. Igniting fuses are designed for use with chemical hand grenades. They burn at high temperatures and ignite the chemical filler.

Grenade Safeties

- Safety Clip. The safety clip is the first of 3 positive safeties found on all casualty producing grenades. The safety clip is the first safety to be removed. (Thumb clip)
- Safety Pin. The safety pin is the second safety on casualty producing grenades. It is the first safety on non-casualty producing grenades. Once the pin is pulled the grenade is ready to be thrown.
- Safety Lever. The safety lever is the last safety device found on all grenades. Once the safety clip and the safety pin are pulled the safety lever must be held in place by the thrower. When the grenade is thrown the striker located on top of the fuse assembly moves up pushing the safety lever away from the grenade body and the striker then detonates or ignites the primer.

Grenade Safeties (Continued)

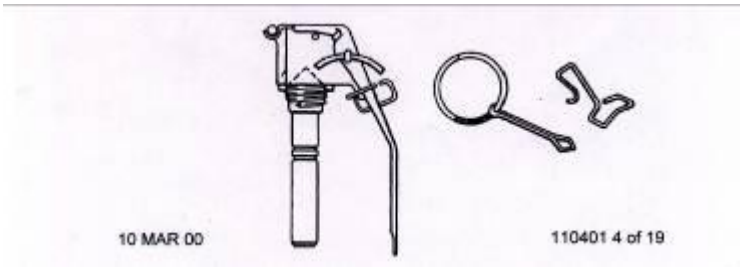

Types of Grenades

M67 Fragmentation

The fragmentation grenade is the primary casualty-producing grenade in the U. S. military. The most common of is the M67 fragmentation grenade. The shape of the fragmentation grenade resembles a baseball. It is olive drab in color with a single yellow band at the top. Nomenclature and/or lot number markings are in yellow around the middle of the grenade body. The killing radius is 5 meters and the casualty-producing radius is 15 meters. It contains 6.5 ounces of composition B explosive and uses a M213 detonation fuse. It has a 4.85-5.15 second time delay fuse and weighs 14 ounces. The average Marine can throw the M67 fragmentation grenade 30 to 40 meters.

M67 Fragmentation Grenade

AN-M14 TH3 Incendiary

The AN-M14 TH3 is used to destroy Equipment such as engine blocks, artillery pieces, mortar tubes, munitions, and any flammable material. The AN-M14 TH3 is cylindrical shaped and is light red with black markings. The body is made of sheet steel. It contains 26.5 ounces of thermite mixture. A portion of the thermite converts to molten iron which burns at 4000 degrees F. and will fuse together the metallic parts of any object it comes in contact with. The grenade will burn for 40 seconds and will burn through a half inch of homogeneous steel. It produces its own oxygen and will burn under water. The fuse has a 1.2-2 second delay, and the average Marine can throw the grenade 25 meters. It weighs 32 ounces and uses a M201A1 igniting fuse.

Grenades (Continued)

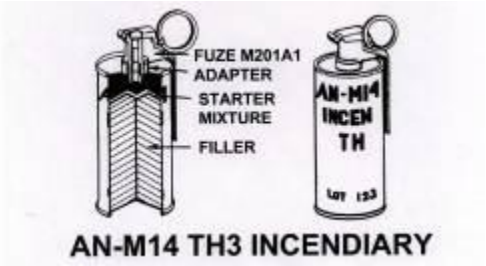

AN-M8 HC

The AN-M8 HC is used for screening small units and as a ground signal. It produces a dense cloud of white smoke, which clings to the ground. The AN-M8 is cylindrical shaped and has a light green body with black markings. The top of the grenade is white to indicate the color of the smoke. The body is made of sheet steel with 19 ounces of type C, HC (high concentration) smoke mixture as filler. The grenade burns for 105-150 seconds producing a dense cloud of white smoke. It has a 1.2 - 2 second time delay fuse. The average Marine can throw the grenade 30 meters. It weighs 24 ounces and uses a M201A1 igniting fuse. (See picture below)

M18 Colored Smoke

The M18 is used as a ground to ground or ground to air signaling device, a target or landing zone marking device or to screen the movement of small bodies of troops. It is available in four colors: red, green, yellow and violet. The M18 is cylindrical shaped and is olive drab with the top indicating smoke color. The body is made of sheet steel. It contains 11.5 ounces of colored smoke mixture. The grenade will produce smoke for a period of 50-90 seconds. It has a 1.2 - 2 second time delay fuse. The average Marine can throw the grenade 35 meters. It weighs 19 ounces and uses a M201A1 igniting fuse.

Grenades (Continued)

ABC-M7A3 CS Riot Control

The ABC-M7A3 is the primary riot control grenade. It is cylindrical in shape and is gray in color with a red band and red markings. The body is made of sheet steel containing 7.5 ounces of burning mixture and 4.5 ounces of pelletized CS agent. The grenade produces a cloud of irritant agent for 15-35 seconds. The fuse has a 1.2-2 second delay. The average Marine can throw the grenade 40 meters. It weighs 15 ounces and uses a M201A1 igniting fuse.

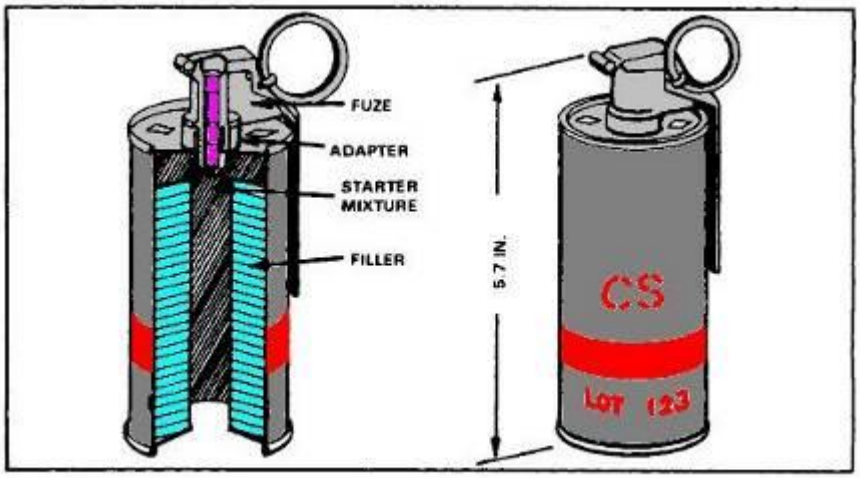

ABC-M7A2 and ABC-M7A3 riot control grenades.

M-69 Practice Grenade

The M-69 practice grenade is used for training. It can be reused by rearming it with another practice fuse. The M-69 grenade is shaped the same as the M67 and is blue in color. The M-69 when armed with the practice fuse produces a loud pop with a small cloud of white smoke. It has a 4-5 second time delay fuse. The average Marine can throw the grenade 40 meters. it weighs 14 ounces and uses a M228 fuse that is screwed into the grenade body. The grenade body can be reused and it has a safety clip.

Grenades (Continued)

Grenade Carriage

Grenades are attached to the FLC pouch in the following manner:

- Attach MOLLE grenade pouch to FLC
- Open the grenade pouch and slide the grenade into the pouch with the safety lever against the FLC.
- Be sure the pull ring is in the downward position.
- Wrap the carrying strap around the neck of the fuse and snap the carrying strap to the carrying sleeve.

Hand Grenade Gripping

The importance of properly gripping the hand grenade cannot be overemphasized.

- Safety and throwing efficiency are obtained when the grenade is held in the throwing hand with the safety lever placed between the first and second joints of the thumb.
- For right-handed personnel, the grenade is held upright with the pull ring away from the palm of the throwing hand so that it can be easily removed by the index finger or middle finger of the free hand.
- For left-handed personnel, the grenade is inverted with the fingers and thumb of the throwing hand positioned in the same manner as by the right-handed person.
- The M-24 series of riot control hand grenades have an arming sleeve, which serves as the safety lever on other grenades. When throwing these grenades, the arming sleeve is held in place by applying constant pressure with the thumb of the throwing hand. The safety pin is pulled by the free hand.

Grenades (Continued)

Throwing Positions

In training, throwing positions are used for uniformity and control and to familiarize Marines with the proper manner of throwing grenades in combat if the situation gives you a choice.

- Standing position. This position is the most desirable and natural one from which to throw grenades, the standing position is normally used when occupying a fighting position or during operations in fortified positions or urban terrain.

  - Estimate the range between you and the target.
  - Take grenade with a FIRM grip, the throwing hand forming the letter "C" with thumb over safety lever and forefingers around the grenade body.
  - Stand half facing the target.
  - Balance weight evenly on both feet by placing the feet shoulder width apart.
  - Hold grenade chest high.
  - Remove safety clip with the thumb of the non-throwing hand by raking the clip away from the grenade.
  - Hook the index finger of the non-throwing hand into the ring of the safety pin.
  - Remove the safety pin by using a twist pull motion away from the grenade body.
  - Assume a good throwing position with the non-throwing arm pointed down range.
  - The throwing arm is cocked behind the helmet with the grenade held 4 - 5 inches from the helmet.
  - Throw grenade, and follow through by stepping forward as you throw.
  - If cover is available, take a knee after you ensure the grenade has left your position.
  - If no cover is available, drop to the prone position after the grenade has cleared your position with your helmet in the direction of the grenade.

- Kneeling. Used when you have a low wall, shallow ditch, or similar cover for protection.

  - Estimate the range between you and the target.
  - Take grenade from the grenade pocket of the magazine pouch with the throwing hand, forming the letter "C" with the thumb over the safety lever and the forefingers around the grenade body.
  - Hold the grenade shoulder high.
  - Kneel on the non-throwing knee, half facing the target. Remove the safety clip.
  - Hook the forefinger of the non-throwing hand through the safety ring attached to the safety pin.

Grenades (Continued)

Throwing Positions (Continued)

- Remove the safety pin and throw the grenade.
- If cover is available, take a knee after you ensure the grenade has left your position.
- If no cover is available, drop to the prone position after the grenade has cleared your position with your helmet in the direction of the grenade.

- Prone position. Used when no cover is available and the grenade must be thrown a greater distance than is possible in the prone position.

  - Estimate the distance to the target.
  - Lie on your back with your body perpendicular to the grenade's intended line of flight.
  - Using the proper grip with the grenade chest high. The grip must keep the safety lever completely against the body until the grenade has been thrown.
  - Remove the safety clip with the thumb of the non-throwing hand by raking the clip away from the grenade. Hook the index finger or middle finger of the non-throwing hand into the pull ring on the safety pin. Remove the safety pin by using a twist-pull motion away from the grenade body.
  - Assume a throwing position with the non-throwing arm pointed down range, flat on the ground. The throwing arm is cocked behind the helmet with the grenade held 4 - 5 inches from the helmet. Cock your right leg (left leg for a left-handed thrower) with your foot firmly braced against the ground.
  - With your non-throwing hand, grasp any object that is capable of giving you added leverage to increase your throwing distance. In throwing the grenade, push off with your rearward foot to give added power to your throw.
  - After throwing the grenade, roll over onto your stomach and press yourself flat against the ground.

Pyrotechnic Signals

Ground pyrotechnic signals are classified as either hand-held or ground smoke signals. They are used for signaling or illuminating missions.

Characteristics

Ground pyrotechnic signals rise to a height of 180 to 250 meters before functioning

- Hand-held signals. These signals are issued in their own mechanism and are designed to reach a minimum height of 200 meters. This group of signals includes single-star parachutes, five-star clusters, and smoke parachutes.

Capabilities and Uses

These signals are used for communications or illuminating a small area.

- Signaling (Communication). Effective control of units on the battlefield depends largely on communication. Pyrotechnics are utilized to supplement or take the place of normal communication means.
- Illuminating. Illuminating capabilities of pyrotechnics are limited because of their size. However, they can be used to illuminate a small area for a short period of time.

Hand-held Signals

Star clusters, star parachutes, and smoke parachutes are three hand-held signals used by the Marine Corps.

Star Clusters

Star clusters are used for signaling and illuminating. They are issued in an expendable launcher, which consists of a launching tube and firing cap. These signals produce a cluster of five free-falling pyrotechnics.

- Types. Three current types of star clusters include the M125 and M125A1, green star cluster; the M158 red star cluster; and the M159, white star cluster.
- Operation. Operation of hand-held signals should be as follows:
  - Hold the signal in the left hand, red-knurled band down, with the little finger in alignment with the red band.
  - Withdraw the firing cap from the upper end of the signal.
  - Point the ejection end of the signal away from the body and push the firing cap onto the signal until the open end of the cap is aligned with the red band.
  - Grasp the center of the signal firmly with the left hand, holding the elbow tight against the body with the signal at the desired trajectory angle and away from the signal to avoid injury to the face and eyes.
  - Strike the bottom of the cap with a sharp blow with the palm of the right hand, keeping the left arm rigid.

- Function. When the firing cap is struck, the firing pin is forced into the base of the launcher tube at the primer. When the primer is struck, the flash from the primer ignites an initiating charge of black powder at the base of the signal. Gases from the burning initiating charge expel the signal from the launcher tube (rocket barrel) with slight recoil. As the signal is expelled, four flexible steel fins unfold to stabilize the signal during flight. After the signal rises approximately 6 meters, the rocket motor, which has ignited by the propelling gases, begins to burn fully, forcing the signal to a height of 200 to 215 meters (650 to 700 feet). At that point, a delay element ignites an ejecting charge, which in turn forces the five-star illuminant cluster out of the nose of the signal body.
- Firing data. Star clusters burn 6 to 10 seconds. Their rate of

Pyrotechnic Signals (Continued)

Star Parachutes

Star parachutes are also used for signaling and illuminating. They are issued in an expendable launcher that consists of a launching tube and a firing cap. These signals produce a single parachute-suspended illuminate star.

- Types. The current types of star parachutes include the M126A1, red star parachute; the M127A1, white star parachute; and the M195, green star parachute.
- Operation. These signals are fired in the same manner as star clusters.
- Function. These signals function in the same manner as star clusters.
- Firing data. The M126 and M127 series of star parachutes rise to a height of 200 to 215 meters. The M126 buns for 50 seconds and the M127 burns for 25 seconds. Their average rate of descent is 2.1 one meters per second. The signal can be seen for 50 to 58 kilometers (30 to 35 miles) at night.

Smoke Parachutes

Smoke parachutes are used for signaling only. They are issued in an expendable launcher that consists of a launching tube and a firing cap. These signals produce a single, perforated colored smoke canister that is parachute-suspended.

- Types. The current types of smoke parachutes include M128A1, green smoke parachute; the M129A1, red smoke parachute; and M194, yellow smoke parachute.
- Operation. These signals are fired in the same manner as star clusters.
- Function. These signals function in the same manner as star clusters.
- Firing data. Smoke parachutes rise to a height of 200 to 215 meters. The signals emit smoke for 6 to 18 seconds, forming a smoke cloud which persists for 60 seconds. Their rate of descent is 4 meters per second.

Surface Trip Flares Surface trip flares outwardly resemble antipersonnel mines or hand grenades. Their primary use is to warn of infiltrating troops by illuminating the field. They may also be used as signals or as booby traps. When activated, the flare produces 50,000 candlepower of illumination.

M203 Grenade Launcher History and Description

The M203 40mm grenade launcher replaced the M79 “Thump Gun” carried by Marines throughout the 1960s. The M203 was fielded in conjunction with the implementation of the M16 family of weapons. Both the M203 and the M79 fired the same 40mm ammunition. This advent now gave the grenadier the offensive capability of a rifle in addition to the 40mm grenade launcher. Today, fire-team leaders in the rifle platoon typically carry the M203, though the weapon is found throughout every unit in the Marine Corps.

Description

The M203 is a single shot, breech loaded, pump action (sliding barrel), shoulder fired weapon attached to the underside of the barrel of the M16A2/A4 and M4 weapon systems.

Characteristics

Length of Barrel	30 cm	12 inches
Length of M16 and M203	97.5 cm	39 Inches
Weight of M203(Un-Loaded)	1.35 kg	3lbs
Weight of Rifle & M203 (Loaded)	5.35 kg	11.12 lbs
Trigger Pull	2.27 kg	5 lbs

Capabilities

Maximum Effective Range:	
Point Target	150m
Area Target	350m
Muzzle Velocity	76 meters per second

Effective Casualty Radius	5m kill 15m casualty
Anti-Armor Capability	2in Homogenous Steel (High explosive dual purpose [HEDP])
Minimum engagement distance (combat)	31 meters

M203 Grenade Launcher Components

The major components of the M203 are:

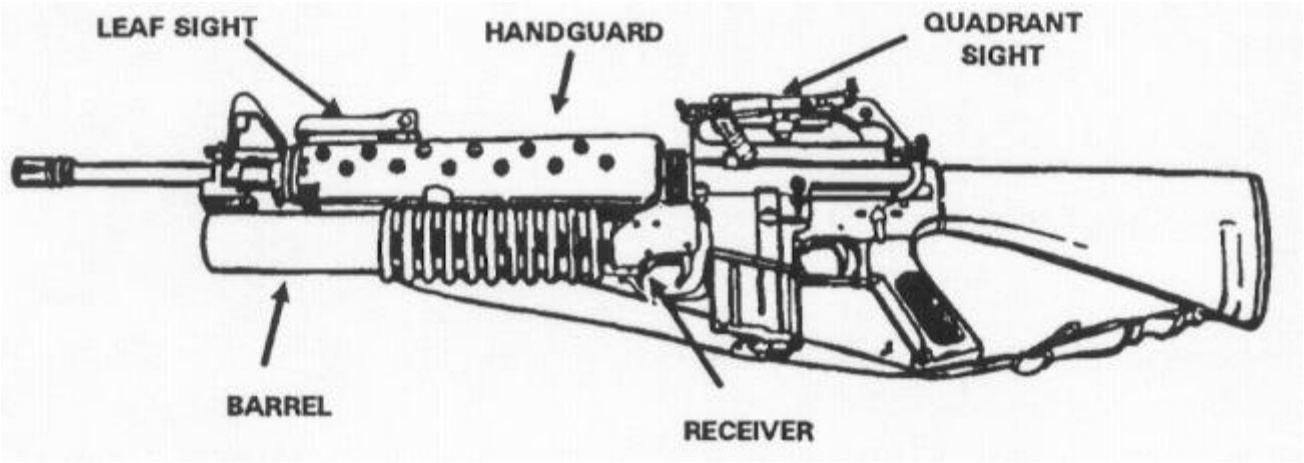

- Hand-guards. The hand guard assembly houses the rifle barrel.

- Receiver Assembly. The receiver assembly houses the firing mechanism and the ejection system and supports the barrel assembly.

- Barrel Assembly. The barrel holds the cartridges once loaded and directs the projectile toward its target.

- Quadrant Sight Assembly. The quadrant sight attaches to the left side of the rifle's carrying handle, and enables the grenadier to adjust for elevation and windage. The assembly consists of the following:

  - Mounting Screw.
  - Sight.
  - Sight Latch.
  - Rear Sight Aperture.
  - Sight Aperture Arm.
  - Front Sight Post.
  - Sight Post Arm.

M203 Grenade Launcher Components (Continued)

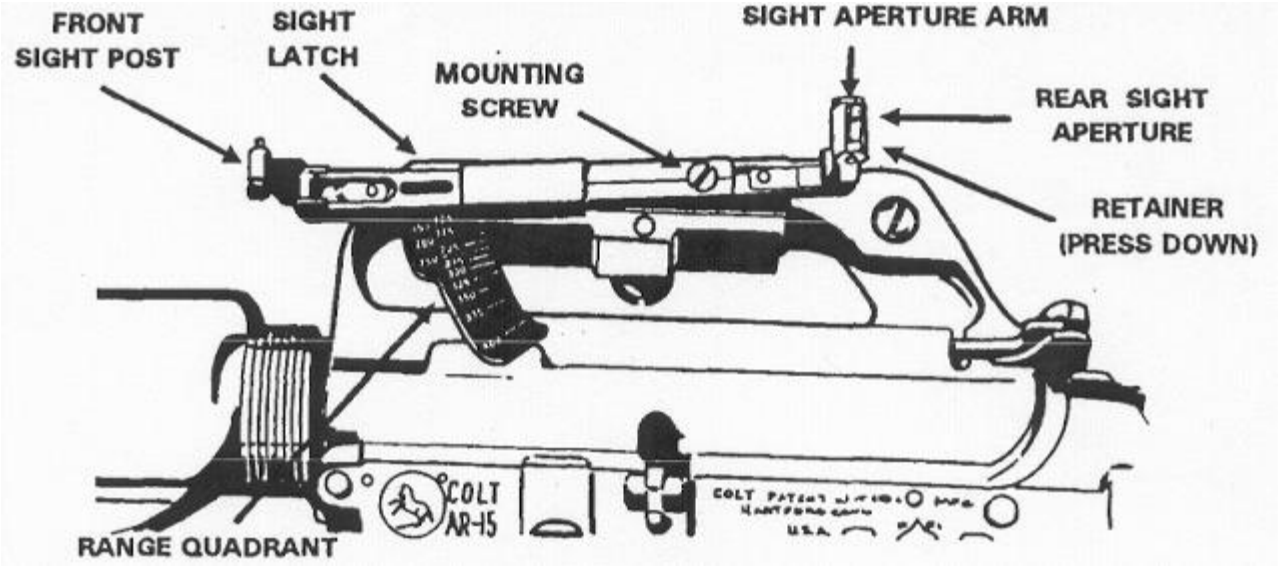

- Clamp, Bracket, and Mounting Screw. The clamp and bracket assembly hold the quadrant sight on the rifles carrying handle. A mounting screw inserts through the right side of the clamp and into the bracket assembly.

- Sight Arm Range Quadrant. The sight arm mounts both the sight aperture and the sight post arm (which holds the front sight post). This allows the sight to pivot on the range quadrant to the desired sighting. The range quadrant is graduated in 25-meter increments from 50 to 400 meters. Applying rearward pressure on the sight latch releases the quadrant sight arm so it can move along the range quadrant. The desired range number is then centered in the rear sight aperture. Releasing the sight latch locks to sight in position.

- Front Sight Post. The front sight post mounts on the sight post arm by means of a pivot bracket. The bracket is opened when the sight is to be used, and closed when not in use in order to prevent damage. Use the front sight post to make minor adjustments when zeroing the launcher:

To	Turn the Elevation Adjustment Screw
Decrease Elevation	On the sight post to the right
Increase elevation	On the sight post to the left
Move impacts 5m at 200m	One full turn

M203 Grenade Launcher Components (Continued)

- Leaf Sight. The leaf sight assembly is attached to the top of the hand guard (see diagram below). Leaf sight assembly consists of the following:

  - Sight.
  - Base and mount.
  - Elevation adjustment screw.
  - A windage adjustment screw.

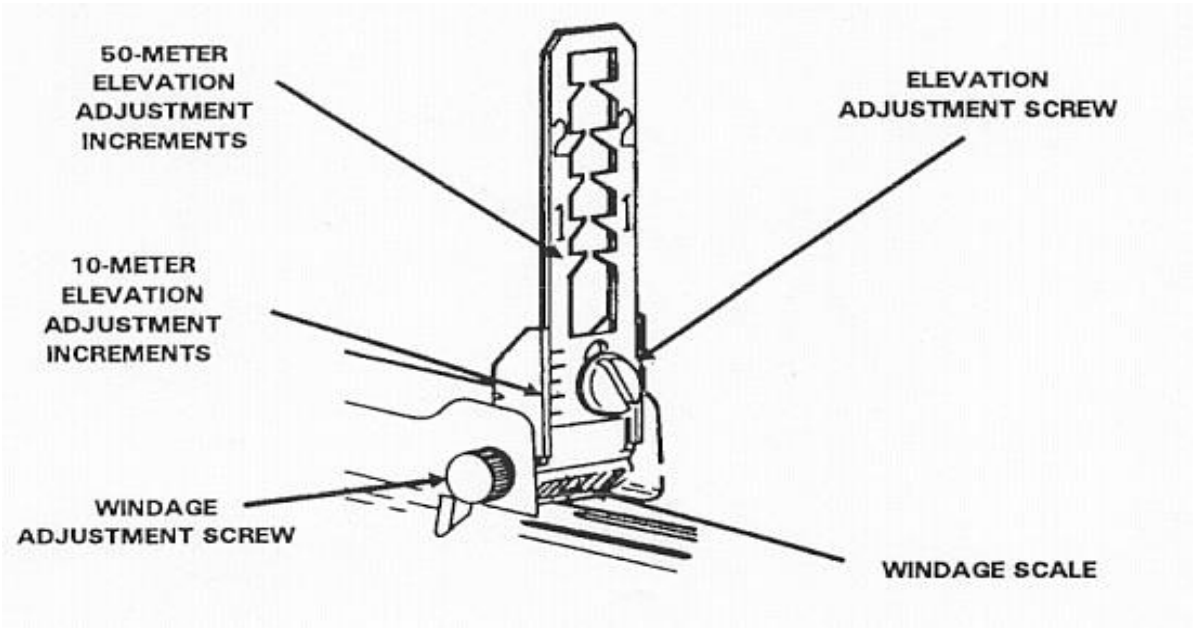

The sight base is attached to the rifle hand-guard via two mounting screws. The sight base protects the sight when not being used.

- Sight Mount and Sight. The sight mount is attached to the base and is utilized to raise and lower the sight. The sight is not marked in actual meters; it is graduated in 50 meter increments from 50 to 250 which are marked with a 1 for 100, 2 for 200, etc.

- The Elevation Adjustment Screw and Elevation Scale. The screw attaches the sight to its mount. The screw can be loosened during the zeroing procedure in order to make adjustments. The rim of the 40mm case is especially useful for this. Raising the sight increases the range and lowering decreases it. The elevation scale consists of five lines spaced equally on the sight. The index line is to the left of the sight. Moving the sight one increment moves the impact of the round 10m in elevation at a range of 200m.

M203 Grenade Launcher Components (Continued)

- Windage Screw and Windage Scale. To make minor deflection adjustments during the zeroing procedure, a knob on the left of the windage screw is turned. The scale has a zero line in its center and two lines spaced equally on each side of the zero line. Moving the knob one increment of the windage scale moves the impact of the projectile 1.5 meters at a range of 200m.

***The 50 meter mark on the leaf sight is marked in red in order to emphasize the danger in zeroing the weapon in at that range due to fragmentation.**

- Trigger Guard. The trigger guard is designed to protect the trigger mechanism. Pressing the trigger guard to the rear allows the trigger guard to be rotated away from the rifle and permits the weapon to be fired while wearing gloves or mittens.

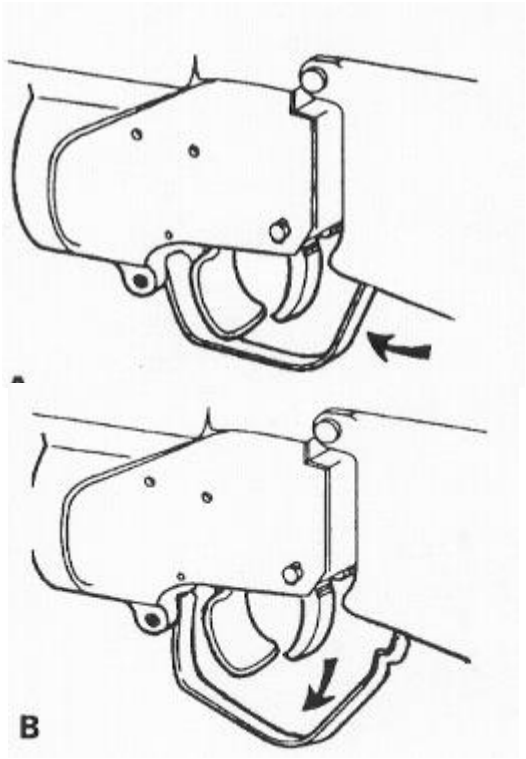

- Safety. The safety is inside the trigger guard, just in front of the trigger. For the launcher to fire, the safety must be forward (see the left diagram below). When the safety is rearward, the launcher is on safe (see right diagram below). The safety is manually adjusted.

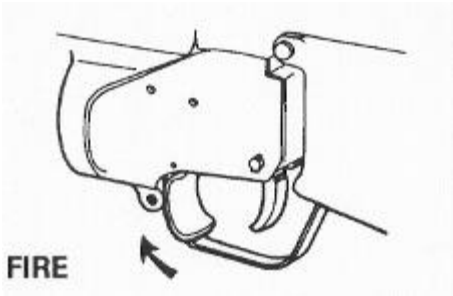

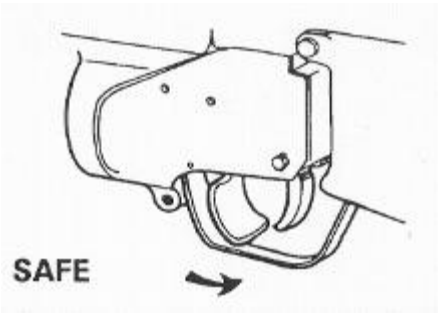

M203 Employment Considerations

The M203 40mm Grenade Launcher is a weapon that helps the unit bridge the gap between direct and indirect fire assets. At the squad level, it provides the fire-team and squad leader the ability to cover the dead space within a sector of fire. Other abilities include the ability to deliver point fire on caves, bunkers, and windows. The M203 is also effective at stopping vehicles. The ability to provide illumination and marking of targets is yet another capability this weapon provides.

Limitations of the weapon system include the need for a clear trajectory, the relatively slow rate of fire, vulnerability of the sights to damage, and the minimum engagement distance of 31 meters in combat (165 meters in a training environment). Another much overlooked limitation of this weapon is the restriction on training ammunition that eventually leads to a limitation on a Marines' proficiency.

- Offensive Roles. Engage and destroy groups of enemy personnel, thin-skinned vehicles, bunkered positions, provide suppression on an objective, engage targets in defilade, provide obscuration, and marking of targets to assist in direction of fires.

- Defensive Roles. Provide fires to cover the team's sector. Be able to engage the dead space that the SAW is unable to cover. Cover obstacles within sector with M203 fire in order to maximize enemy casualties.

M203 Ammunition

All M203 ammunition is of the fixed variety, that is both the projectile and the cartridge case are fixed together in one round. The fuses for the high explosive dual purpose (HEDP, DODIC B546) and the training practice round (M407A1, DODIC B577) are impact detonated. These fuses are armed by rotation and must travel 14-27 meters from the muzzle before being armed. Once the fuse is armed it is a very sensitive projectile, so it is important that the path to the target is clear. Both of these rounds are restricted to being fired on dedicated sensitive fuse impact areas. The 40mm practice (M781, DODIC B519) does not contain a sensitive fuse and can be fired on live fire maneuver ranges.

40 MM High Explosive, Dual Purpose

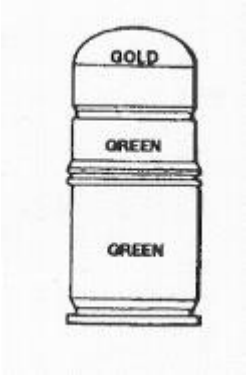

- Identified by olive drab aluminum skirt with a green middle band, and a gold tip with white markings.
- Three evenly spaced indentations on the type to assist in low light identification of the round.
- When fired at a flat trajectory at a target, has the ability to penetrate 2 inches of steel plate.
- Effective casualty radius (ECR) of the round is 5 meters kill and 15 meters casualty radius.

DODIC: B546

40 MM High Explosive

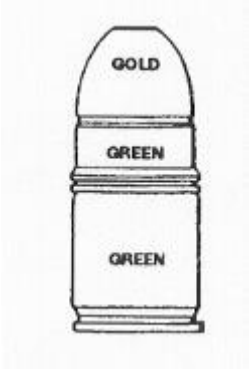

- Same color scheme as the HEDP.
- Tip is more pointed.
- Designed to produce a casualty inducing ground burst
- ECR of the round is 5 meters kill and 15 meters casualty radius.

DODIC: B549

M203 Ammunition (Continued)

40 MM Star Parachute

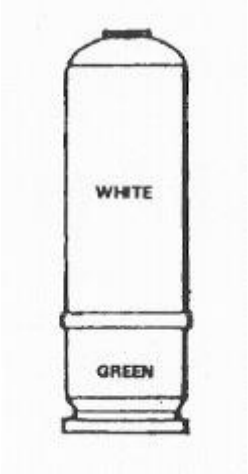

- White impact or bar alloy aluminum with black markings.
- Used for illumination or marking.
- Lighter and more accurate than comparable handheld illumination rounds.
- Parachute deploys from round to lower the candle at a rate of 7 feet per second. Burn time approximately 40 seconds.
- Round is identified by the writing on the side to indicate the color white (W), red (R) or green (G).

DODIC: B504 (G), B535 (W), B506 (R)

40 MM Tactical CS Grenade

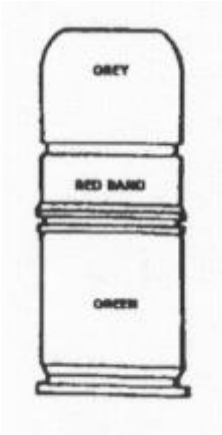

- Recognized by blunt, grey nose, red band, and green cartridge.
- Six evenly spaced indentations are placed on the extraction rim of the cartridge case to identify the round in low visibility situations.
- Used for riot control and civil disturbances.
- Effective range of 400 m and will release CS gas for 25 seconds.

DODIC: B537

40 MM Ground Marker (Smoke)

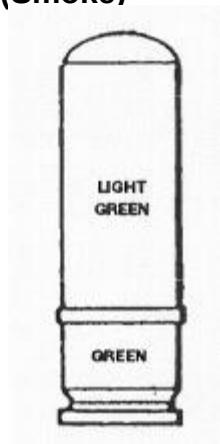

- Light green impact aluminum with black markings.
- Tip is the color of smoke (red, yellow or green).
- Utilized for signaling and marking.

DODIC: B475 (Y), B476 (G), B477 (W), B479 (R)

M203 Ammunition (Continued)

40 MM White Star Cluster

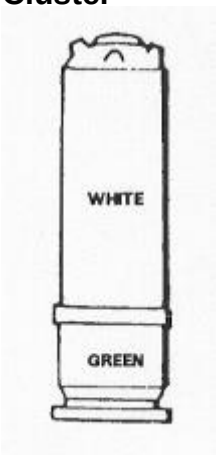

- White with black markings.
- Attached Plastic casing has raised W for night identification.
- Burns for approximately 7 seconds during freefall.

DODIC: B536

40 MM Practice

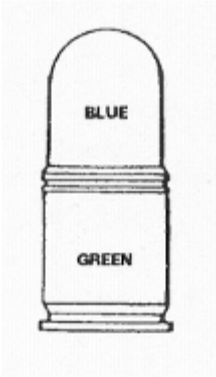

- Used for training.
- Identified by blue tip.
- On impact frangible blue tip ruptures and releases an orange puff of dye.

DODIC: B519

M203 Handling and Functional Procedures

- **Unloading/Clearing**. Follow, in sequence, the steps in the table below to ensure that the M203 is clear of ammunition.

Step	Action
1	Point weapon in a safe direction.
2	Attempt to put the weapon on safe.
3	Depress the barrel latch and push the barrel assembly forward, catching the round as it is extracted from the chamber.
4	Secure the round.
5	Physically and visually inspect the chamber to ensure that no ammunition is present.
6	Pull the barrel assembly to the rear until the barrel latch locks into position.
7	Place the weapon on safe.

- **Cleaning and Inspecting**. The table below describes how to clean and inspect the M203.

Component	Action
Barrel assembly	• Clean with a bore brush the same diameter as the barrel (40mm). • Use cleaning, lubricating, and preserving compound (CLP) to clean off dirt and carbon. • During inspection, look for cracks in the hand guard and be sure all carbon is removed.
Receiver	• Use an all-purpose brush to clean all surfaces. • During inspection, be sure the receiver is tightly secured to the M16 and no rust or dirt is in the firing pin hole.
Hand guards	• Clean in the same manner that you clean M16 hand guards. • During inspection, look for cracks in the hand guards.
Sights	• Clean with a paintbrush or all-purpose brush to sweep away any dirt. • During inspection, be sure the sights are movable and in proper working order.
Metal surfaces	• Apply a light coat of CLP on all metal surfaces; do *not* put any CLP in the firing pin hole of the receiver.

M203 Handling and Functional Procedures (Continued)

- **Disassembly**. Before disassembling the M203, you must clear the weapon. The table below lists the steps for disassembling the M203.

1. Loosen the mounting screw and remove the quadrant sight assembly from the sight mount of the M16A2 rifle (see diagram below).

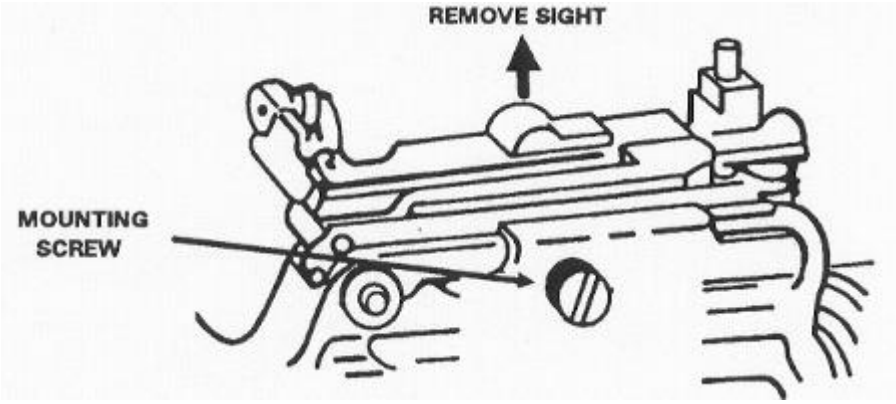

Removing the Quadrant Sight

M203 Handling and Functional Procedures (Continued)

- Disassembly (Continued).

2. Remove the barrel assembly and hand guard assembly, in either order (see table below).

Step	Method 1, Barrel Assembly First	Method 2, Hand Guard Assembly First
1	Push the barrel latch and move the barrel forward until it hits the barrel stop. 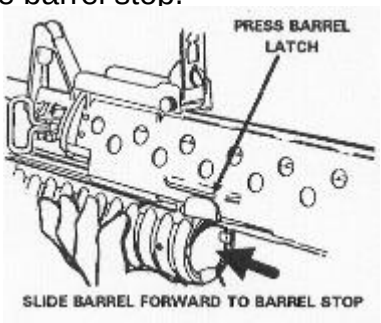	Pull back on the M16's slip ring and remove the hand guard by pulling it up and back. 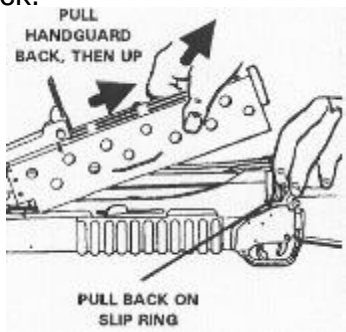
2	On the left side of the hand guard, insert a cleaning rod into the fourth hole back from the muzzle. 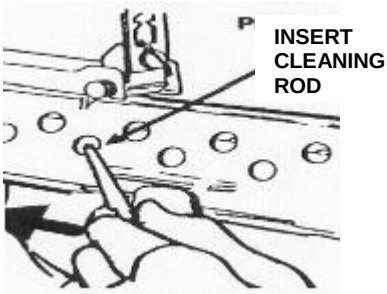	Push the barrel latch and move the barrel forward until it hits the barrel stop. 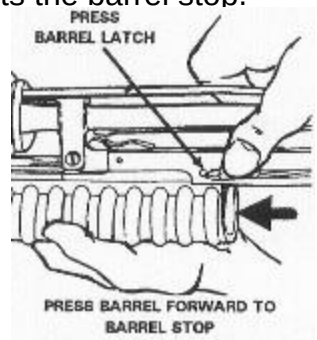
3	Depress the barrel stop and slide the barrel forward and off (see diagram below). 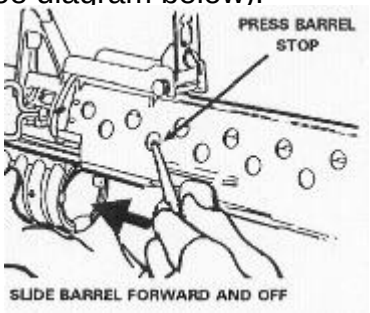	Use a cleaning rod to depress the barrel stop and slide the barrel forward and off. 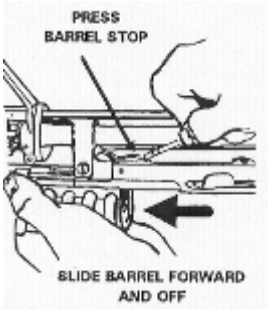

M203 Handling and Functional Procedures (Continued)

- **Reassembly**. Assembly of the grenade launcher (described in the table below) is the reverse of disassembly.

1. Install the barrel by pressing the barrel stop and sliding the barrel into the receiver.

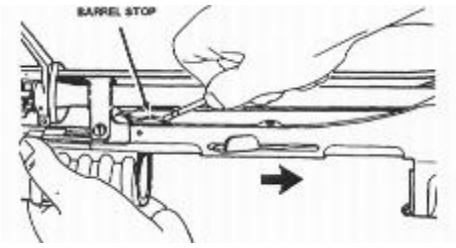

2. Lock the barrel by moving it rearward until it closes with a “click”.

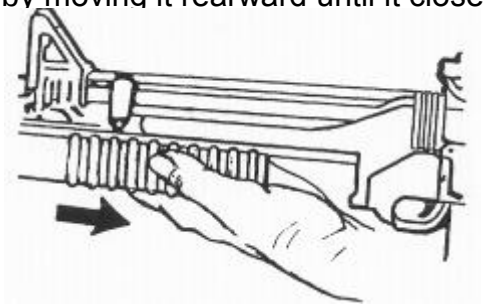

3. Install the hand-guard, and secure it with the slip ring.

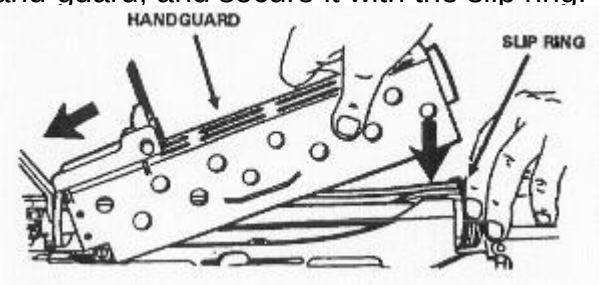

4. Install the quadrant sight assembly.

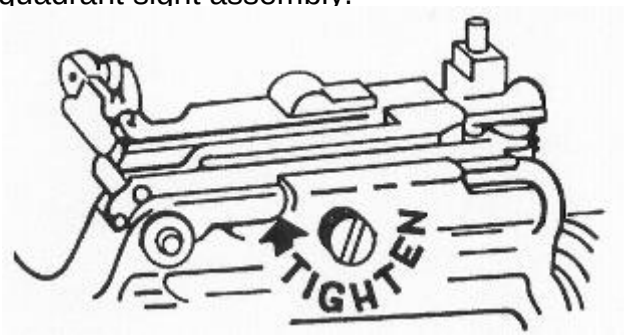

M203 Handling and Functional Procedures (Continued)

- **Function Check**. Perform a function check in the correct order to ensure that the grenade launcher has been assembled correctly. Notify the unit armorer at once if the launcher fails to function. Conduct the function check as described below.

  - Check the proper operation of the sear.
  - Cock the launcher and pull the trigger. The firing pin should release with a metallic click.
  - Hold the trigger to the rear and cock the launcher again. Release the trigger, then pull. The firing pin should again release.
  - Check the safety in both the SAFE and FIRE positions by pulling the trigger.
  - The launcher must be cocked before the safety can be placed in the SAFE position.
  - Move the barrel forward and back. Be sure both the stop and barrel latch function.

- **Functioning**. The cycle of operations consists of the eight steps described in the below.

1. Firing

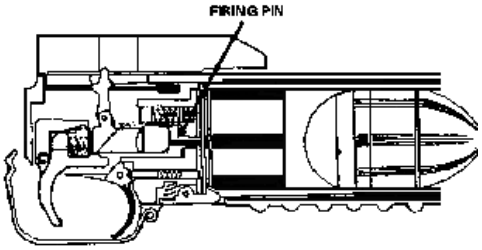

As the trigger is pulled rearward, the primary trigger sear is disengaged from the bottom surface of the firing pin, releasing the spring-driven firing pin and causing it to be forced against the primer of the cartridge.

2. Unlocking

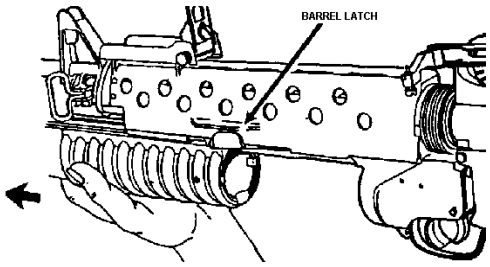

Accomplished by depressing the barrel release latch and sliding the barrel assembly forward.

M203 Handling and Functional Procedures (Continued)

- Functioning (Continued).

3. Extracting

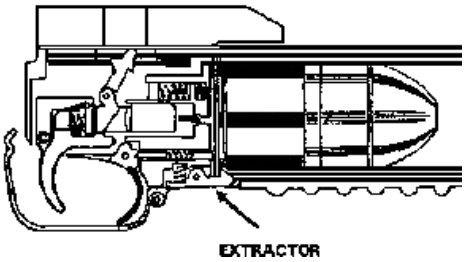

Extracting and cocking take place at the same time. As the barrel assembly is opened, a spring-loaded extractor keeps the spent cartridge seated against the receiver until the barrel is clear of the cartridge case.

4. Ejecting

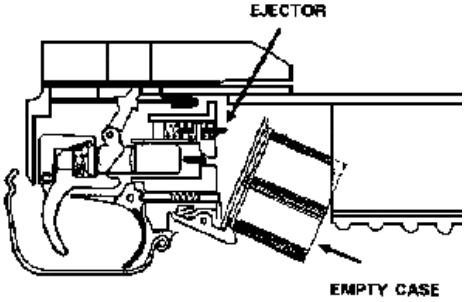

Accomplished by a spring-loaded ejector pushing the expended cartridge case away from the face of the receiver assembly when the barrel assembly has cleared the cartridge case.

5. Cocking

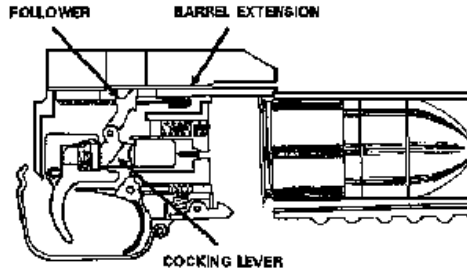

The barrel latch, when depressed, unlocks the barrel assembly, so it can be moved forward along the receiver assembly. As the barrel assembly extension, which is interlocked with the cocking lever, moves forward, the cocking lever is forced downward, which, in turn, forces the spring-loaded firing pin rearward.
The spring-loaded follower moves forward with the barrel extension. As the barrel assembly continues its forward movement, the barrel extension disengages from the cocking lever, and the follower holds the cocking lever in the down position.

When the barrel assembly is moved rearward, the follower is also forced to the rear. The cocking lever again engages the barrel extension, and the firing pin moves slightly forward and engages the primary trigger sear. The weapon is then cocked.

M203 Handling and Functional Procedures (Continued)

- **Functioning (Continued)**.

6. Loading

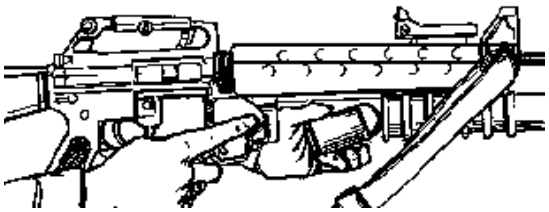

When the barrel assembly is in the open position, the cartridge is inserted into the breach end of the barrel.

7. Chambering

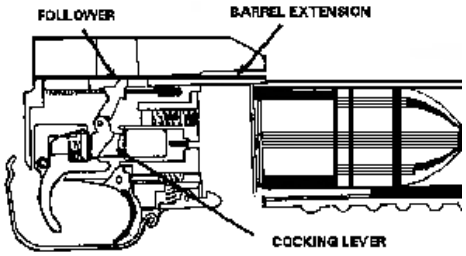

Occurs during the closing of the barrel assembly. As the breech end of the barrel assembly closes, the barrel latch becomes engaged to the barrel assembly, and the cocking lever engages the barrel extension so that it cannot be moved forward along the receiver assembly.

8. Locking

Accomplished by sliding the barrel assembly toward the grenadier until the barrel release latch engages in its notch in the barrel assembly thereby locking the barrel assembly to the receiver assembly.

M203 Handling and Functional Procedures (Continued)

- **Zeroing the Leaf Sight**. A correct zero consists of the elevation and windage sight settings that enable the grenadier to hit the point of aim at a given range with either the leaf or the quadrant sight. The table below lists the steps to zero the leaf sight.

1. Select a target at 200 meters.
2. Place the sight in the upright position.
3. Place the center mark of the windage scale on the index line on the rear of the sight base.
4. Loosen the elevation adjustment screw on the leaf sight.
5. Place the leaf sight's index line on the sight mount's center elevation mark.
6. Tighten the elevation adjustment screw.
7. Assume a prone supported firing position.
8. Load one round of 40mm HEDP or target practice (TP) ammunition.
9. Use correct sighting and aiming procedures to align the target with the front leaf sight.
10. Fire a round, sense the impact, and adjust the sight. o **Windage:** Turn the sight windage screw clockwise to move the leaf sight to the left; counterclockwise to move it to the right. One increment moves round impact 1½ meters at a range of 200 meters. o **Range:** Use a 40mm cartridge case and turn the elevation adjustment screw to raise the leaf sight and increase the range; lower the leaf sight to decrease the range. Turning the screw one increment moves round impact 10 meters at a range of 200 meters.
11. Fire two more cartridges, readjusting the sight after each. Once a round impacts within 5 meters of the target, the weapon is zeroed.
12. After you have zeroed the weapon, record the zero data on your scorecard. As soon as you can, transfer the information to a separate, small piece of paper and tape it inside the M16 pistol grip.

M203 Handling and Functional Procedures (Continued)

- **Zeroing the Quadrant Sight.** The table below lists the steps to zero the quadrant sight.

1. Select a target at 200 meters.
2. Ensure that the quadrant sight is correctly mounted on the rifle's carrying handle.
3. Open the front sight post and rear sight aperture. o Move the *front sight post* to its highest position, then back 2½ turns. o Depress the rear sight retainer. o Slide the *rear sight aperture* to the left until its white index line aligns with the edge of the sight aperture arm.
4. Move the sight latch rearward, and reposition the quadrant sight arm to zeroing range (200 meters).
5. Assume a prone supported firing position.
6. Use correct sighting and aiming procedures to align the target with the front sight post and rear sight aperture.
7. Load one round of 40mm HEDP or TP ammunition.
8. Fire a round, observe the impact, and adjust the sight. o **Elevation:** Turn the front sight post right to decrease elevation; left to increase elevation. At a range of 200 meters, one full turn equals 5 meters. o **Windage:** Press the sight aperture retainer; move the rear sight aperture away from the barrel to move the trajectory to the left; toward the barrel to move it to the right. At a range of 200 meters, one notch on the rear sight aperture equals 1½ meters.
9. Fire two more cartridges, readjusting the sights after each. If the round lands within 5 meters of the target, the weapon is zeroed.
10. After you have zeroed the weapon, record the zero data. Keep the data in the butt of the weapon with the M16A2 battle sight zero (BZO) data.

- **Firing Positions.** The four fundamentals of M203 marksmanship are steady position, aiming, breathing and trigger control. When the grenadier changes position, only the first fundamental (steady position) varies; the other three remain the same.

M203 Handling and Functional Procedures (Continued)

- **Firing Positions (Continued).** The basic firing positions are shown in the table below.

Position	Picture
Supported Prone	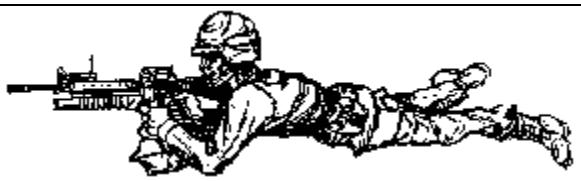
Standing	
Kneeling	
Sitting, Cross-legged	
Sitting, Open-legged	
Sitting, Cross-ankle	

M203 Handling and Functional Procedures (Continued)

- **Immediate Action**. Take immediate action in the event of either a:
  - **Hang-fire.** A *delay* in the functioning of the round's propelling charge explosive train at the time of firing. The length of this delay is unpredictable, but in most cases, it ranges between a split second and 30 seconds. Such a delay in the functioning of the round (hang-fire) could result from the presence of grit, sand, frost, ice, or excess oil or grease.
  - **Misfire.** A weapon's *complete failure to fire*. A misfire in itself is not dangerous; however, because it cannot be immediately distinguished from a hang-fire, it must be considered a hang-fire until proven otherwise.

Either can be caused by an ammunition defect or by a faulty firing mechanism. Any failure to fire must be considered a hang-fire, until that possibility is eliminated.

  - **Procedures.** Because a stoppage may have been caused by a hang-fire, you must follow the precautions listed below until the round has been removed from the weapon and the cause of the failure determined.

1. Keep the M203 pointed down range at the target; keep everyone clear of its muzzle. If the stoppage occurs during training, shout, "Misfire!" and clear the area of any nonessential personnel.
2. Wait 30 seconds from the time of failure. Before opening the barrel assembly to perform the unloading procedure, reduce the distance that the round may fall by holding the weapon close to the ground. Cup hand under breach in an attempt to catch round.
3. Depress the barrel latch and push the barrel assembly all the way forward.
4. After removing the round from the receiver, determine whether the round or the firing mechanism is defective. Examine the primer to see if it is dented. If the primer is: • **Dented**, separate the round from other ammunition until it can be disposed of properly. • **Not dented**, reload and attempt to fire again. If the round fails to fire, the firing mechanism is at fault.

- **Weapons Condition Codes**. The table below describes the applicable weapons condition codes for the M203 grenade launcher.

Weapons Condition Code	Description
1	• Round in the chamber. • Barrel closed. • Safety on.
2	***Not applicable to the M203.***
3	***Not applicable to the M203.***
4	• Chamber empty • Barrel closed • Safety on

M203 Handling and Functional Procedures (Continued)

- **Weapons Commands.** The steps to execute "Make Ready" taking the M203 from condition 4 to condition 1 are listed in the table below.

1. Point weapon in a safe direction.
2. Ensure the weapon is in condition 4.
3. Depress the barrel latch and push the barrel assembly all the way forward.
4. Insert a round into the chamber until it is fully seated.
5. Pull the barrel assembly to the rear until the barrel latch locks into position.
6. Place the weapon on safe.

  - The steps to execute **"Fire"** are listed in the table below.

1. Take the weapon off safe.
2. Engage the target.

  - The steps to execute **"Unload"** taking the M203 from condition 1 to condition 4 are listed in the table below.

1. Point the weapon in a safe direction.
2. Attempt to put the weapon on safe.
3. Depress the barrel latch and push the barrel assembly forward, catching the round as it is extracted from the chamber.
4. Secure the round.
5. Inspect the chamber to ensure that no ammunition is present.
6. Pull the barrel assembly to the rear until the barrel latch locks into position.
7. Put the weapon on safe. **Note**: The cartridge case or round should automatically eject. If the case is stuck, tap it with a cleaning rod to remove it.

  - The steps to execute **"Unload Show Clear"** taking the M203 from condition 1 to condition 4 are listed in the table below.

Action
1. Point the weapon in a safe direction.
2. Attempt to put the weapon on safe.
3. Depress the barrel latch and push the barrel assembly forward, catching the round as it is extracted from the chamber.
4. Secure the round.
5. Inspect the chamber to ensure that no ammunition is present.
6. Have a second individual inspect the chamber to ensure no ammunition is present.
7. Pull the barrel assembly to the rear until the barrel latch locks into position.
8. Put the weapon on safe.

M203 Handling and Functional Procedures (Continued)

- **Constructing Field-Expedient Firing Aids for the M203** (see diagram below). The fire team leader emplaces both yoke and sector of fire stakes to be used in firing the rifle and emplaces additional stakes when assigned a principal direction of fire (PDF) for the grenade launcher. When assigned a PDF:

  - Place a recoil stake or sandbag to the rear of the butt plate.
  - Position a deflection stake adjacent to the recoil stake to ensure proper lateral deflection.
  - Position an elevation stake adjacent to one of the sector stakes to ensure proper elevation and range and to aid in maintaining proper deflection.

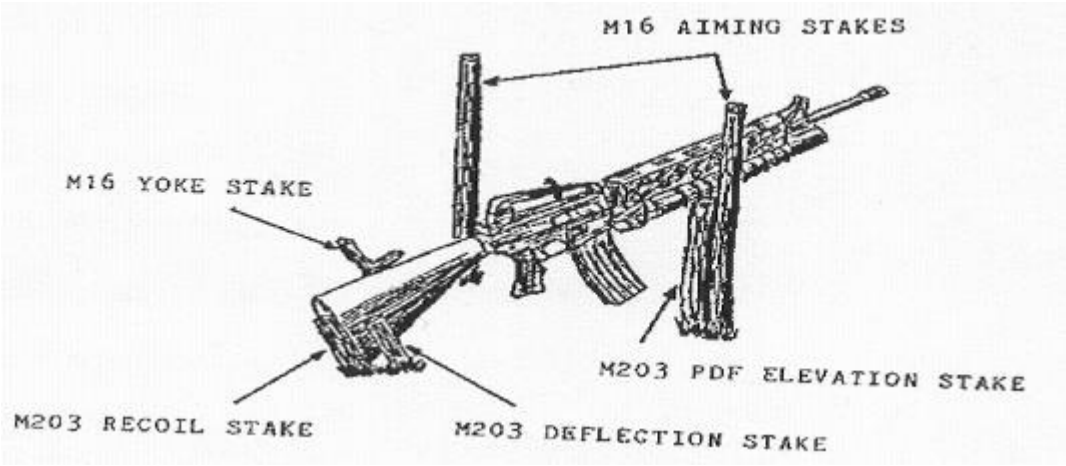

M27 Infantry Automatic Rifle (IAR)

History

The M27 Infantry Automatic Rifle was adopted by the Marine Corps in 2011 and replaced the M249 light Machinegun as the “Squad Automatic Weapon”.

The M27 is an Automatic Rifle and it sets the conditions for small unit movement in a completely different manner than its predecessor, the M-249 Squad Automatic Weapon. The M-249 SAW is a light machinegun that was tasked with filling the role of the automatic rifle. In order to truly understand the subtle, but important doctrinal differences between the two weapons, and where some confusion may have existed, the definitions of each must be examined.

Automatic Rifle-A self-loading, **fixed barreled** rifle chambered for a rifle cartridge, capable of delivering both semi and fully automatic fire. This **select-fire** capability, as well as the use of magazine-fed rifle ammunition, differentiates it from a machinegun and submachine gun.
Light machinegun- A belt-fed automatic weapon, with a **removable barrel**, designed to be carried and employed by an **individual** – with or without an assistant – from a **bipod** and / or an assault fire posture, in the direct infantry support role.

The “automatic rifleman” equipped with an actual automatic rifle is a proven concept that was first introduced in 1918 and solidified in 1944 when the first similarly equipped and structured 13-man Marine Rifle Squad was authorized.

CHARACTERISTICS AND SPECIFICATIONS

a. **Characteristics**. The M27 Infantry Automatic Rifle (IAR) is a lightweight, air-cooled, pusher rod gas operated, magazine fed, shoulder fired weapon. It operates in semi-automatic and automatic modes of fire. This allows the user to engage with precision, and switch to suppressive fire, or vice versa, as needed. Compared to the M249, the reduction in weight allows the user to be more agile in today’s aggressive fight. The IAR’s pusher rod gas system directs 95% of propellant gases and fouling out of the muzzle, allowing the weapon to remain virtually carbon free for hundreds of rounds. Built with a Free Floating Rail System there is no contact between the barrel and Rail system except for at the base of the receiver

M27 Infantry Automatic Rifle (IAR) (Continued)

b. **Specifications**.

(1) Caliber. 5.56mm x 45.

(2) Operating System. Pusher rod gas system, closed bolt.

(3) Barrel Twist. 1 in 7 right-hand twist.

(4) Trigger Pull. 45.5 – 9.5 lbs.

(5) Muzzle Velocity. 2,887 fps.

(6) Fire Selector. Safe, Semi, and Auto.

(7) Weight. 9 lbs 13.5 oz (loaded and sling).

(8) Barrel Length. 16.5 inches.

(9) Length.

(a) Extended. 37.44 inches.

(b) Collapsed. 33.66 inches.

Rates of Fire

(a) Cyclic Rate of Fire. 700-900 rpm.

(b) Sustained Rate of Fire. 36 rpm at 95 degrees Fahrenheit.

Effective Ranges.

(a) Point Target. 550m.

(b) Area Target. 700m.

(c) Maximum Range. 3,938 yds.

M27 Infantry Automatic Rifle (IAR) (Continued)

c. **Nomenclature**.

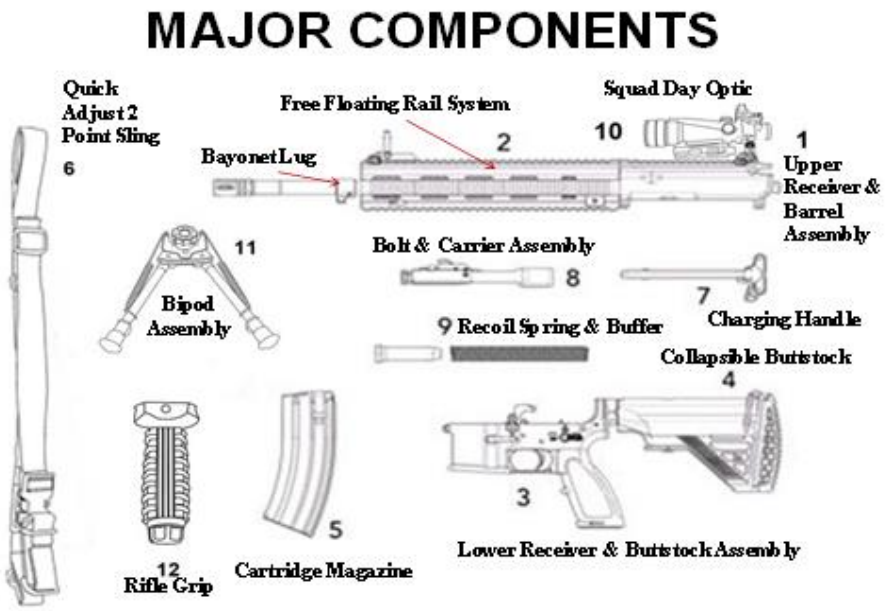

(1) Upper Receiver and Barrel Assembly.

(2) Free Floating Rail System (FFRS). The IAR has a free floating, detachable rail system with four MIL-STD 1913 rails. With bore-sight alignment repeatability, no zeroing is required when the FFRS is removed and reinstalled.

(3) Lower Receiver and Buttstock Assembly.

(4) Collapsible Buttstock. The sliding butt stock is ambidextrous and adjustable to 6 positions for length of pull. It also contains a rear sling swivel

(5) Cartridge magazine.

(6) Quick Adjust 2 Point Sling

(7) Charging Handle.

(1) Bolt Carrier and Assembly

(10) Squad Day Optic

(11) Bipod assembly

(12) Rifle Grip

M27 Infantry Automatic Rifle (IAR) (Continued)

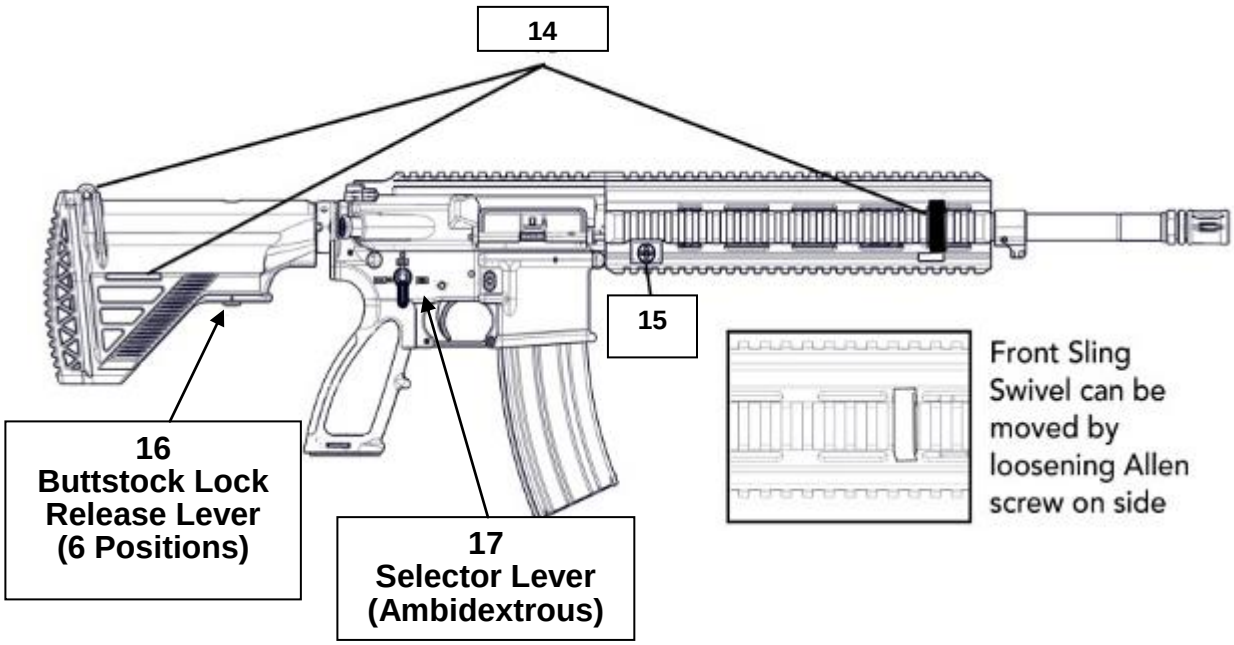

(14) Sling Swivel and Sling Attachment Points: Front sling swivel can be moved.

(15) Free Floating Rail Screw

(16) Buttstock Lock Release Lever: 6 adjustable positions

(17) Selector Lever: Ambidextrous lever. Unlike the M16A4 and M4. Have 3 positions

SAFETY POSITIONS: There are 3 different positions the safety can be on while using the M27.

Safe Position: The safety lever is facing towards the white box with a bullet and an **"X"** over it

M27 Infantry Automatic Rifle (IAR) (Continued)

Semi-Automatic Position: Placement of the safety is up towards the box with the red bullet incased. This allows for semi-automatic fire.

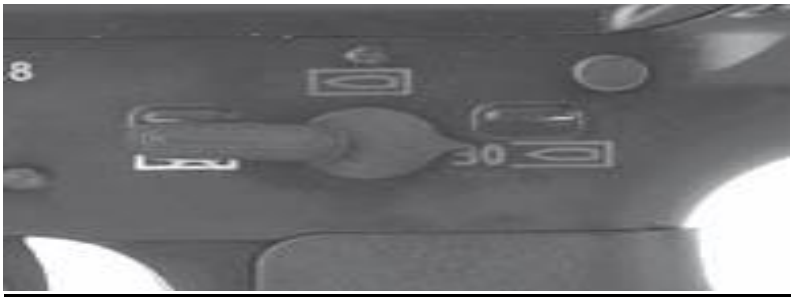

Automatic Fire Position: The safety selector is facing rearward towards the open red box with a bullet and number **"30"**. This allows the weapon to be fired at the full automatic rate of fire.

Gas Operations

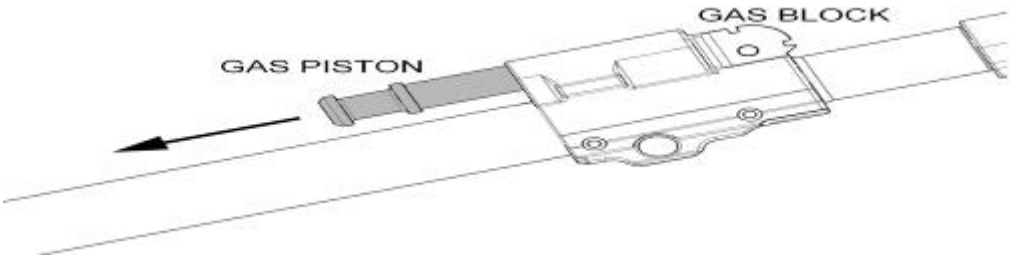

Gas Block: Directs expended gas to move the gas piston.

Gas Piston: Moves the piston rod back which forces the bolt to the rear to continue the cycle of operations.

M27 Infantry Automatic Rifle (IAR) (Continued)

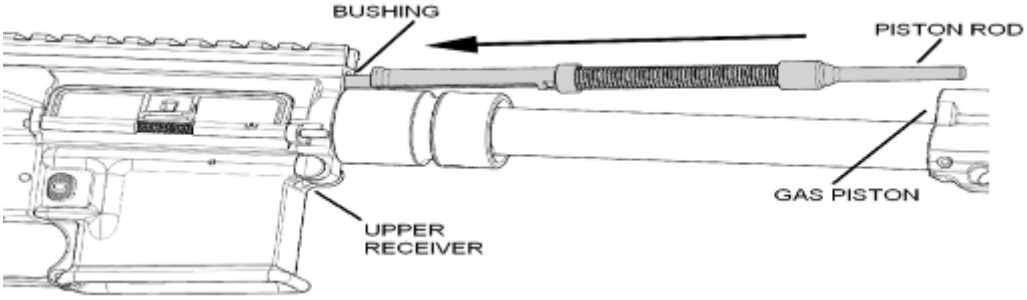

Piston Rod: Drives the bolt back from expended gas.

Bushing: Point at base of piston rod that is inserted into the upper receiver.

Bolt assembly

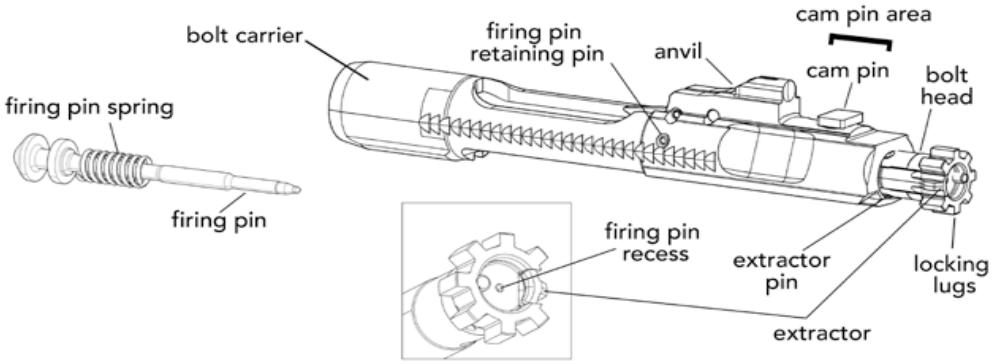

Firing Pin

Firing Pin Spring

Bolt Carrier

Firing Pin Retaining Pin: Captive pin should not be fully removed.

Anvil: The point where the piston rod drives the bolt to the rear.

Cam Pin

Bolt Head

Locking Lugs

Extractor Pin

Extractor

Firing Pin Recess

M27 Infantry Automatic Rifle (IAR) (Continued)

CYCLE OF OPERATIONS.

Feeding: The bottom locking lug acts as a feed paw stripping the top round out of the cartridge.

Chambering: The cartridge continues to drive forward from the spring until the round is seated in to the chamber and the bolt stops at the end of the barrel.

Locking: This is when then bolt locking lugs rotate from the cam pin until they have locked with the locking lugs on the chamber. The bolt is now locked with the upper receiver.

Firing: Happened when the hammer is released striking the firing pin which indents the primer of the cartridge igniting the propellant charge firing the round.

Unlocking: Redirected gas from the pressure of the round forces the gas piston and piston rod to move rearward striking the anvil forcing the bolt carrier back. Once the bolt carrier begins to move the cam pin rotates until the locking lugs on the bolt head rotate free of the locking lugs on the chamber.

Extracting: This is the spent cartridge being pulled from the chamber slightly rotating counter clockwise from the cam pin rotation.

Ejecting: Ejecting throws the cartridge from the receiver. After the cartridge has been extracted and the cartridge is clear of the chamber the ejector spring and plunger force the spent cartridge out the ejection port.

Cocking: Cocking occurs when the bolt carrier rides over the hammer and forces the hammer back to its cocked position.

DISASSEMBLY.

(1) Check and double-check that the weapon is in condition 4.

(2) Separate the upper and lower receivers by removing the rear take-down pin and the pivot pin.

(3) Ensuring the hammer is down, remove the buffer and buffer spring.

M27 Infantry Automatic Rifle (IAR) (Continued)

(4) Pull the charging handle to the rear and remove the bolt carrier and charging handle from the upper receiver.

(5) Remove the FFRS by unscrewing the locking screw (captive screw), then sliding the FFRS forward and off the barrel. The bolt lugs can be used as a screwdriver to undo or tighten the locking screw.

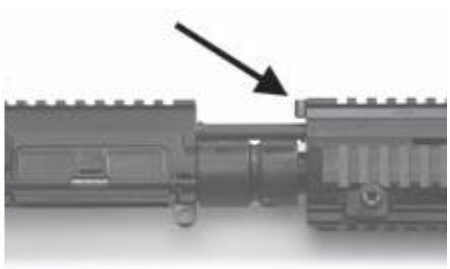

(6) Remove the piston rod by pulling back until the rod clears the piston, and then lift upward. Pull the piston out of the gas block. Caution: These parts will be extremely hot if recently fired.

(7) On the bolt carrier, remove the firing pin retaining pin (captive pin). Lift the firing pin safety, allowing the firing pin and firing pin swing to fall out of position, and remove from bolt carrier.

M27 Infantry Automatic Rifle (IAR) (Continued)

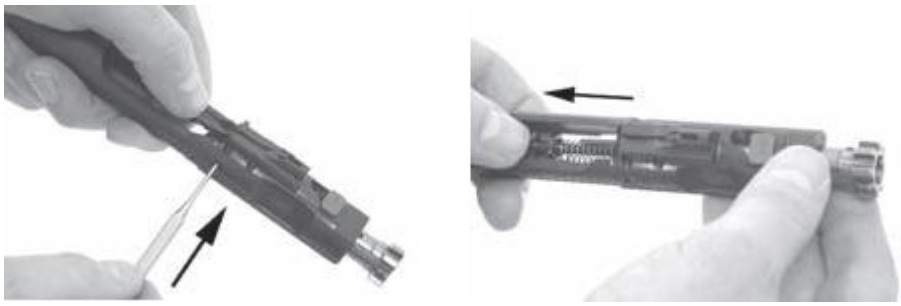

(8) Lift the cam pin straight up out of the bolt carrier. Remove the bolt by pulling it straight out of the front of the bolt carrier.

(9) Press the rear of the extract and using a cleaning rod or the firing pin, punch the extractor pin (direction does not matter). Once the pin is removed, carefully remove the extractor with the extractor spring and extractor buffer attached. No further disassembly is required at the operator level.

MAINTENANCE.

The IAR should be cleaned after completion of firing, and when the weapon is exposed to wet or adverse conditions.

1. Lubrication should be applied generously, but not excessively utilizing a patch or clean rags.

2. The following are authorized lubricants:

a. CLP: (**C**leaner, **L**ubricant, and **P**reservative) is used from -10 degrees to hottest conditions

b. LAW: (**L**ubricant, **A**rctic, **W**eapons) used from -10 degrees to 10 degrees.

c. Dry solvent: used when going from one lubricant to another. If unavailable clean and dry the weapon completely prior to switching lubricants.

There are 2 cleaning kits used for operator level maintenance:

a. The M27 Cleaning Kit

b. Soft-Belt Pack Gun Cleaning Kit

The M27 Cleaning Kit

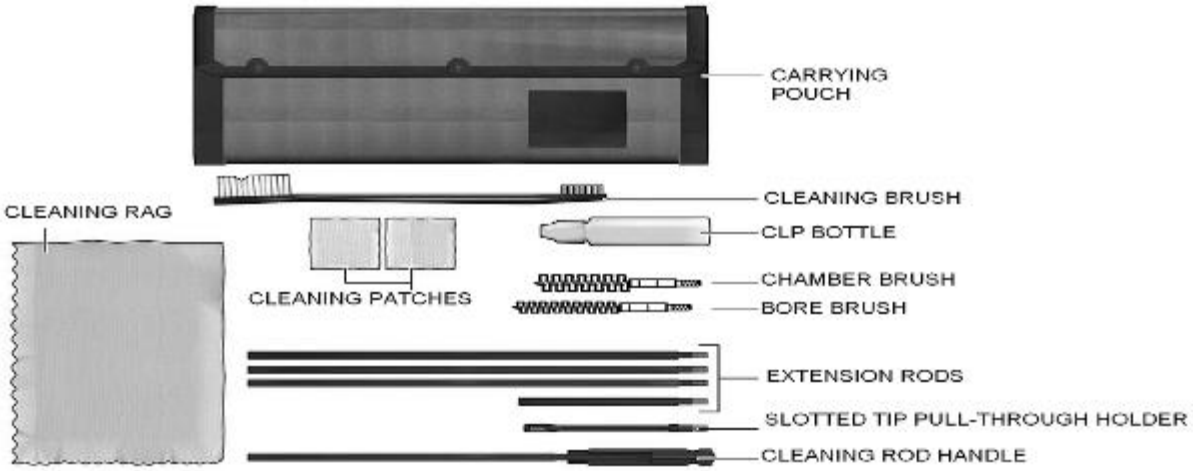

Soft-Belt Pack Gun Cleaning Kit

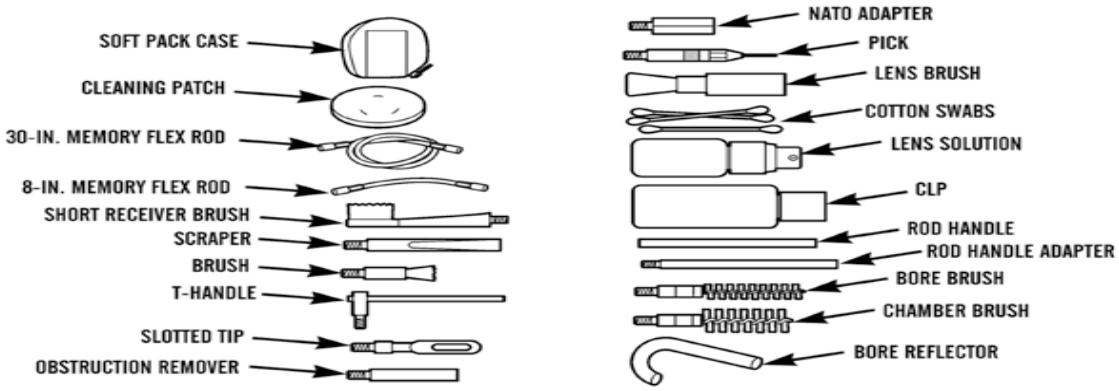

The Following areas should be cleaned and inspected the same as the M16A4:

Bore

Chamber

Bolt & Bolt Carrier

Upper Receiver

Lower Receiver

Buffer & Buffer Spring

Bolt Carrier, Cam Pin, and Firing Pin

Extractor and Ejector

Bore, Chamber and Locking Surface of Bolt Lugs

Rear Take-down and Pivot Pins

All Metal Parts

Gas Piston and Piston Rod should be free of external carbon build up

The following are not authorized cleaning methods:

a. Hot water

b. Dry Clean

c. Other Solvents

Use of these cleaning methods will cause Teflon lubricant built up to be removed.

ASSEMBLY

(a) Assembly is done in the reverse order of Disassembly

Start with the last piece disassembled and work your way backwards.

Once assembled you must conduct a function check to ensure the weapons was assembled correctly and will operate properly.

(b)Quick Adjust 2 Point Sling

M27 Infantry Automatic Rifle (IAR) (Continued)

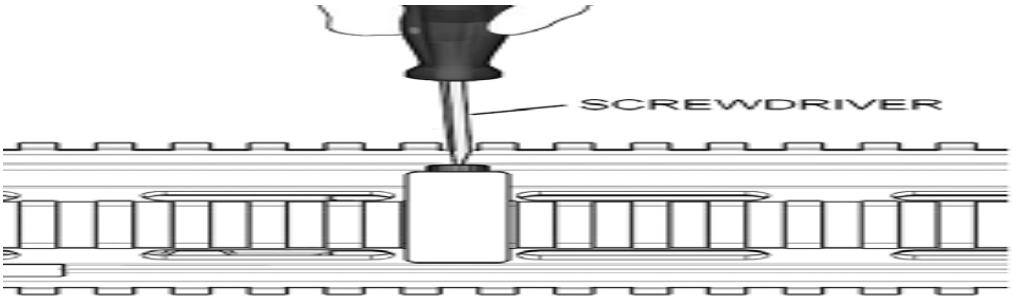

2. Lay the M27 with the muzzle facing towards the operator's non-firing side, ensuring that the 1" webbing adjustment tab and 1-1/2" quick release buckles are towards the muzzle end of the weapon.

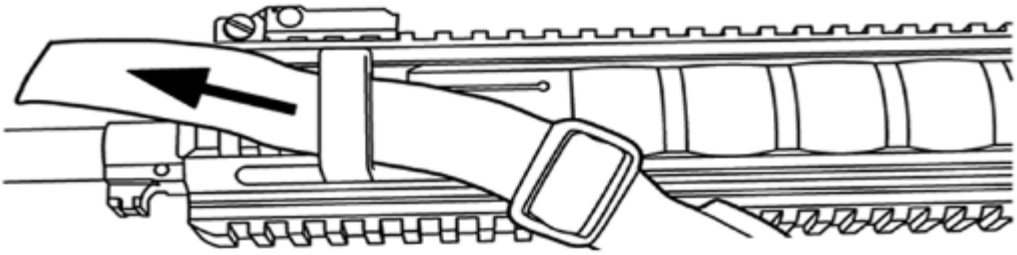

3. Take the open 1" webbing tab, mounted forward of the quick release fitting, and route it through the front sling mount from rear to front.

4. Loop the open end of the webbing back over the front sling mount and route through the sling's plastic tri-glide.

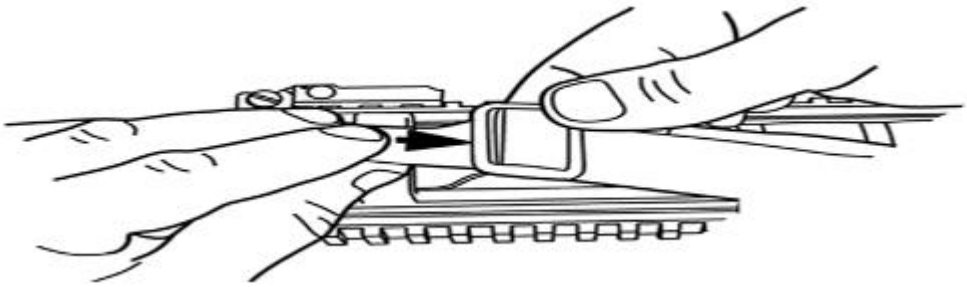

5. Take the separate 7" piece of webbing and route it through the open end through the rear sling mount of the buttstock with two plastic loops facing outwards towards the muzzle

M27 Infantry Automatic Rifle (IAR) (Continued)

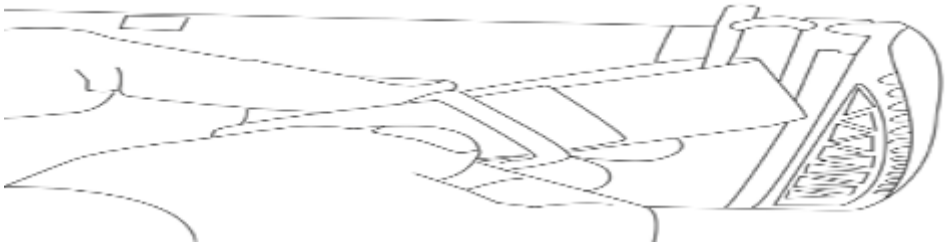

6. Route the open end of the webbing through the buckle mounted on the rear of the sling then back through the two plastic loops.

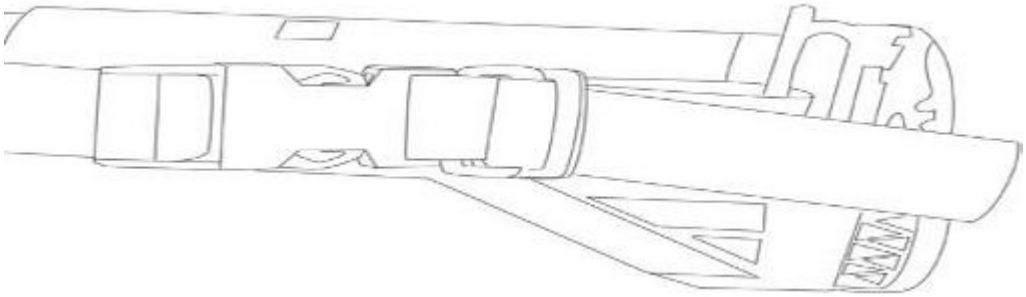

Once assembled you must conduct a function check to ensure the weapons was assembled correctly and will operate properly.

Adjusting the Butt-Stock.

(1) To adjust the butt-stock, squeeze the butt-stock release lever and slide the butt stock forward or aft. This allows the operator to obtain the correct length of pull, eye relief, and proper stock weld. Generally, taller shooters will have the butt-stock extended, while shorter shooters may have it more collapsed. The butt-stock has 6 adjustable positions.

(2) To remove the butt-stock from the receiver extension, pull the release lever outward. While holding the release lever outward, slide the butt-stock to the rear and off the receiver extension.

Installing the Rail Covers.

The rail covers provide the Mil-STD 1913 rails protection from damage and wear (Figure 2-7). They also protect the operator's hands from heat that may be generated during extensive firing. To install the rail covers onto the FFRS, align the tab on the rail cover with the desired groove on the FFRS, and simply snap into place. To remove the rail cover, pull the cover away from the rail.

M27 Infantry Automatic Rifle (IAR) (Continued)

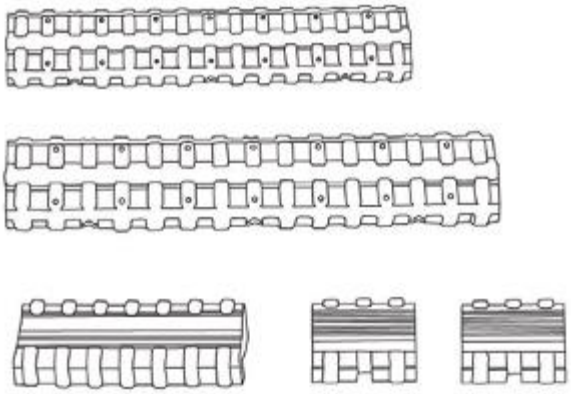

Bipod Operation. The bipod assembly supports the weapon while it is being fired. The bipod assembly attaches to the weapon's stock. The bipod assembly is adjustable; pivots left to right, and can be locked in any pivoted position by the pod lock. To extend and retract bipod legs depress the plunger release. When in the collapsed position, the bipod legs should face away from the shooter and towards the muzzle.

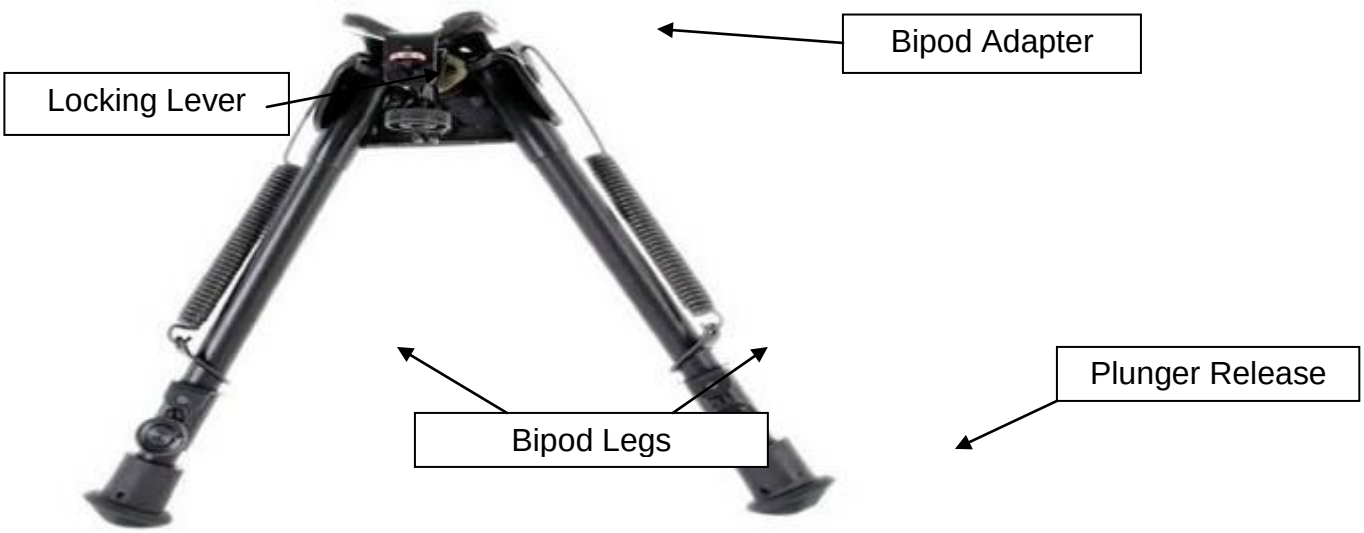

Function Check. A function check should be conducted every time the weapon is disassembled, assembled, and cleaned or if parts are replaced. This will ensure that the weapon is assembled and will operate properly.

(1) Inspect the chamber to ensure the weapon is clear, condition 4, and that the weapon is on SAFE.

(2) With weapon on "safe", attempt to pull the trigger. The hammer should not fall.

M27 Infantry Automatic Rifle (IAR) (Continued)

(3) Place the weapon on semi-automatic, pull the trigger and hold the trigger to the rear. The hammer should fall.

(4) While holding the trigger to the rear, charge the weapon. The hammer should be captured by the disconnector. Release the trigger and an audible “click” should be heard.

(5) Place the weapon on automatic, pull the trigger, and hold to the rear. The hammer should fall. Charge the weapon, the hammer should fall, following the bolt. Release the trigger and re-charge the bolt. The hammer should be captured by the auto sear.

(6) Place the weapon on **SAFE** and close the Ejection Port Cover.

LOADING

The IAR is loaded in the same manner as the M16A4 and M4. When this weapon was first built it was to remain as similar to the M16 so there would be seamless transition.

STOPPAGES AND MALFUNCTIONS

a. Stoppages: are a disruption on the cycle of operations. This is usually caused by operator error:

- Improper weapon maintenance
- Improper loading

b. Malfunctions: are related to mechanical error.

- Broken Extractor
- Damaged Sear
- Ammunition

CORRECTIVE ACTIONS

Corrective actions are the steps taken to make a weapon that is not operational due to stoppages or malfunctions and make it operational. These are the same as the M16A4/M4

UNLOADING AND CLEARING

Same as the M16A4/M4.

M27 Infantry Automatic Rifle (IAR) (Continued)

Mounting, Zeroing, and Sight Adjustments.

(1) Mounting. Mount the rear sight on the rearmost groove of the MIL-STD 1913 rail. Tighten the mounting screw firmly but do not over tighten. Mount the front sight post on the forward-most groove of the rail and tighten the mounting screw firmly (Figure 2-11).

Figure 2-11. Iron Sights Mounted

(2) Zeroing Procedures.

(a) The zero process will be conducted at 25m for a 300m BZO.

(b) Flip up the front sight tower to its full upright position. Depress the detent to rotate the front sight post turret counter-clockwise until it stops. Then rotate up clockwise eight clicks.

(c) Flip up the rear sight to the full upright position. Rotate the range adjuster (rear sight) counter clockwise until it stops (“2” aligns with range index mark). Then rotate the range adjuster clockwise eight clicks until the “Z” aligns with the range index mark.

(c) Fire a five-round group and measure from the center of your group to your point of aim, both vertically and horizontally. To make elevation changes, adjust the front sight. Adjust the windage knob to make left or right corrections.

1 Rotate the front sight post clockwise to move the strike of the round up and counter clockwise to move it down. (One click equals 1/2 inch at 25m).

2 Rotate the windage knob clockwise (direction of arrow with “R”), to move the shot group right, and counter clockwise to move the impacts to the left. (One click equals 3/16 inch at 25m).

(d) Fire another five-round group and make the appropriate adjustments as needed. Fire a final five-round group to confirm your group.

M27 Infantry Automatic Rifle (IAR) (Continued)

(e) Once point of aim/point of impact is achieved, rotate the range adjuster counter clockwise three clicks so the “3” aligns with the range index mark. This will set your zero for 300 meters.

(3) Sight Adjustments. Once the weapon is zeroed, the operator can use the 200, 300, 400, 500, and 600 meter marks on the rear sight. Adjustments can be used between the major marks to achieve ranges such as 275, 350, or 525 meters.

Aiming Devices

The SU-258 / PVQ SDO are a full mission profile sighting system designed for the M249 Squad Automatic Weapon (SAW) with 14.5” or 19.5” barrel. It provides the operator with quick target acquisition at close combat ranges utilizing the Ruggedized Miniature Reflex (RMR) sight or the 3.5x TA11SDO. Both optics are dual-illuminated through the use of Tritium and fiber-optic which allows them to function without the use of batteries. The fiber-optic gathers ambient light and illuminates the reticle during daylight conditions and the tritium will illuminate the aiming point in total darkness. The illuminated reticles will allow the operator to keep both eyes open while engaging targets and maintain maximum situational awareness. The TA11SDO also provides enhanced target identification and increased hit probability out to 1000 meters utilizing the 3.5x magnification and the Bullet Drop Compensator (BDC).

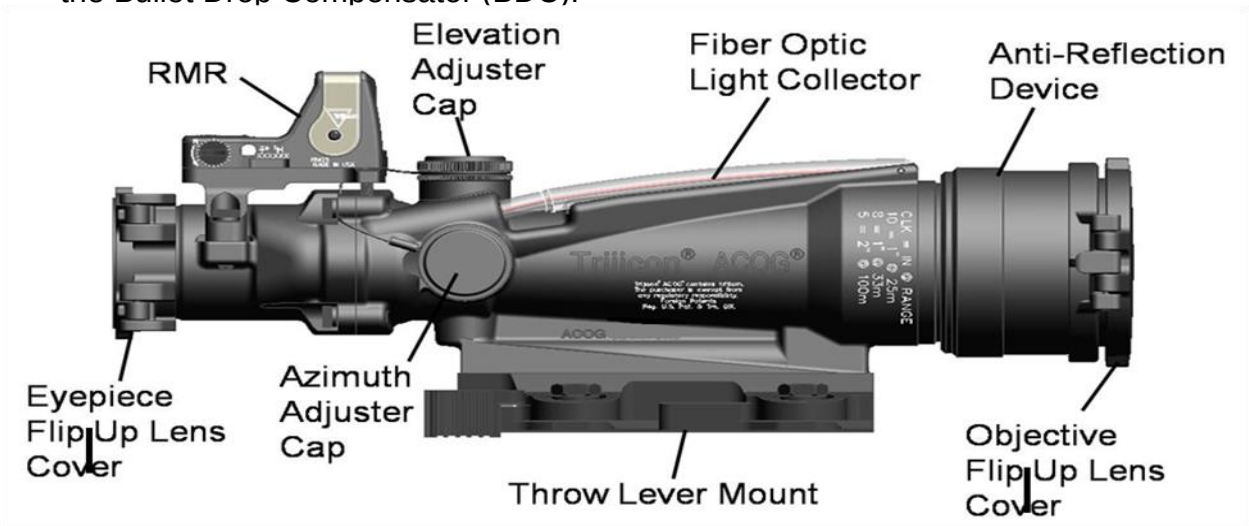

TA11 Squad Day Optic (SDO)

Objective Lens	35mm
Magnification	3.5x
Eye Relief	2.4 in
Exit Pupil	10mm

Field of View	5.5 degrees 31.5 ft @ 100 meters
Adjustments	1 click = .1 mil at 100m (5 clicks = 2” at 100m)
Length	8.7 in
Weight	1.34 lbs
Reticle	Horseshoe Dot w/ BDC
Waterproof	66 ft
Tritium	0.1 curies
	Useful up to 15 years.

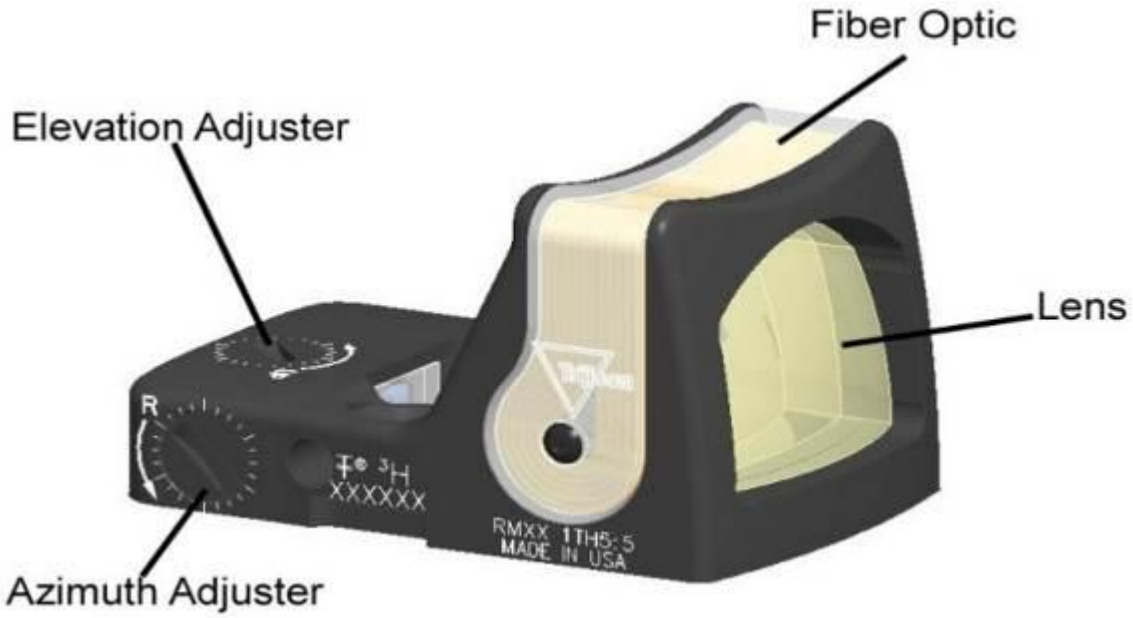

Ruggedized Miniature Reflex (RMR) Site

Sight Window	22mm x 16mm
Magnification	1x
Reticle Pattern	9.0 MOA dot
Power Supply	Fiber Optic and Tritium
Length	45mm
Weight	1.2oz
Adjustments	1 MOA per click (1 click = 1” at 100m)
Housing Material	Forged Aluminum
Waterproof	66 ft for 2hrs
Tritium	0.25 curies
	Useful up to 15 years.

PREPARATION FOR USE.

a. Inspection:

1. The SDO Adjuster Caps are attached and held in place by the retention wires. Make sure the caps are not bent or crimped, and the threads are in good condition.

2. Inspect Objective Lens and Eyepiece to ensure they are clean and free of scratches or cracks.

3. Tritium Lamps will be checked every time before use or immediately following any incident, which might lead to lamp failure.

4. If the reticle does not appear to illuminate, turn into unit armory.

5. Inspect the Anti-Reflection Device (ARD) for damaged threads or honeycomb.

6. Inspect Flip-Up Lens Covers to ensure that caps are opening, closing, and operating smoothly.

MOUNTING

a. Installation of the SDO on the MIL-STD-1913 RAS: The SDO is attached to the weapon's rail using a locking throw lever mount. The SDO should be mounted in a position, which allows the user to obtain proper eye relief. Open the two locking throw levers, front lever first, and then slide the secondary lock to the open position and open the rear lever. The SDO mount is unlocked when both levers are pointing forward.

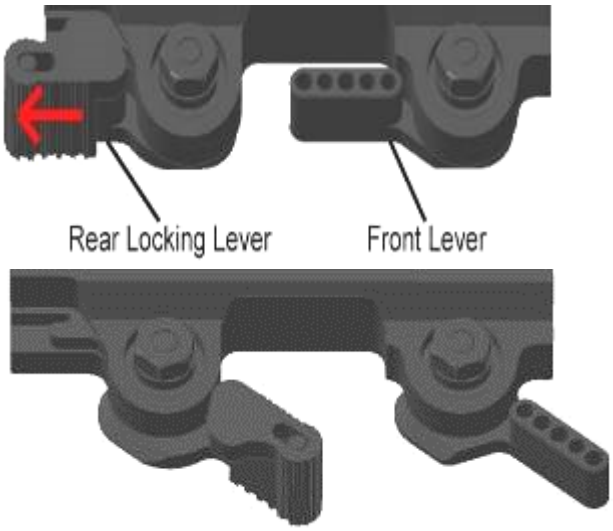

ADJUSTMENT PROCEDURES.

a. The SDO is externally adjusted

b. Adjustments are made using the dial mechanism located under the Adjuster Caps. The caps should only be unscrewed when adjustments are being made.

1. SDO Elevation/Azimuth Dials

a. Remove the Adjuster Cap to expose the Elevation/Azimuth Dials. Moving the dials in the direction of the arrow (clockwise) will move the strike of the bullet **UP** (Elevation) or **RIGHT** (Azimuth) as indicated on the dials

b. Adjustment increments are 0.1 Mil per click **(5 clicks equal 2" at 100m).** Clicks are audible and tactile.

2. RMR Elevation/Azimuth Dials

a. Moving the Elevation/Azimuth Dials in the direction of the arrow (counter-clockwise) will move the strike of the bullet **UP** (Elevation) or **RIGHT** (Azimuth) as indicated on the dials.

b. Adjustment increments are 1 MOA. Clicks are audible and tactile. **1 click moves the bullet impact 1" on a target at 100m.**

c. (3) To use Adjuster Wrench, remove hex key from handle, then remove wrench to expose bladed end.

BDC AND RANGING CAPABILITIES.

a. SDO Ranging Capabilities.

1. The outside portion of the Horseshoe represents a 19" target at 200m (19" is the average width of a man's shoulders). The open end of the Horseshoe represents a 19" target at 300m. The 400 and 500m horizontal stadia lines below the Horseshoe Dot represent 19" at the indicated range.

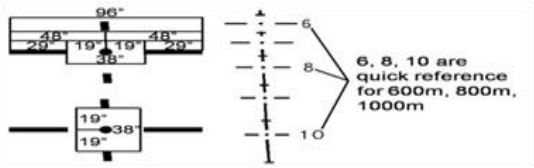

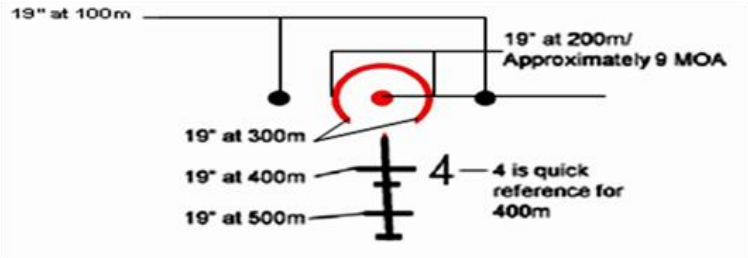

2. To range your target beyond 500m, determine which 19” gap fits the target’s shoulders. Once you have correctly ranged your target, use the corresponding barrel length aiming point as your POA/POI.

3. The open areas within the BDC represent 38” at the specified distance (38” is the average length of a man’s torso). Targets correctly ranged from 600-1000m.

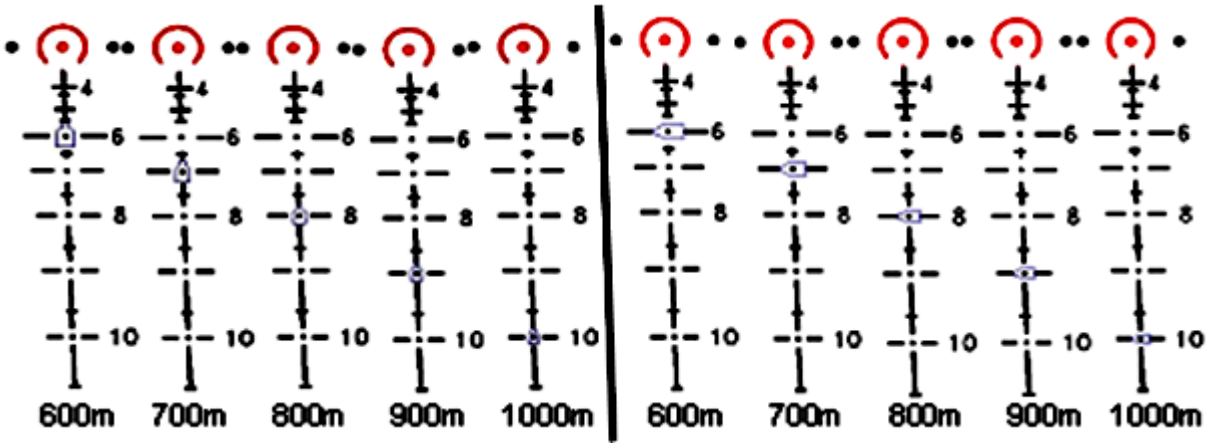

SDO POA/POI 100m – 1000m

1. Range target utilizing the large number stadia lines from 400m to 1000m and then transition to the smaller sub stadia line for POA/POI. This is due to the change of barrel lengths.

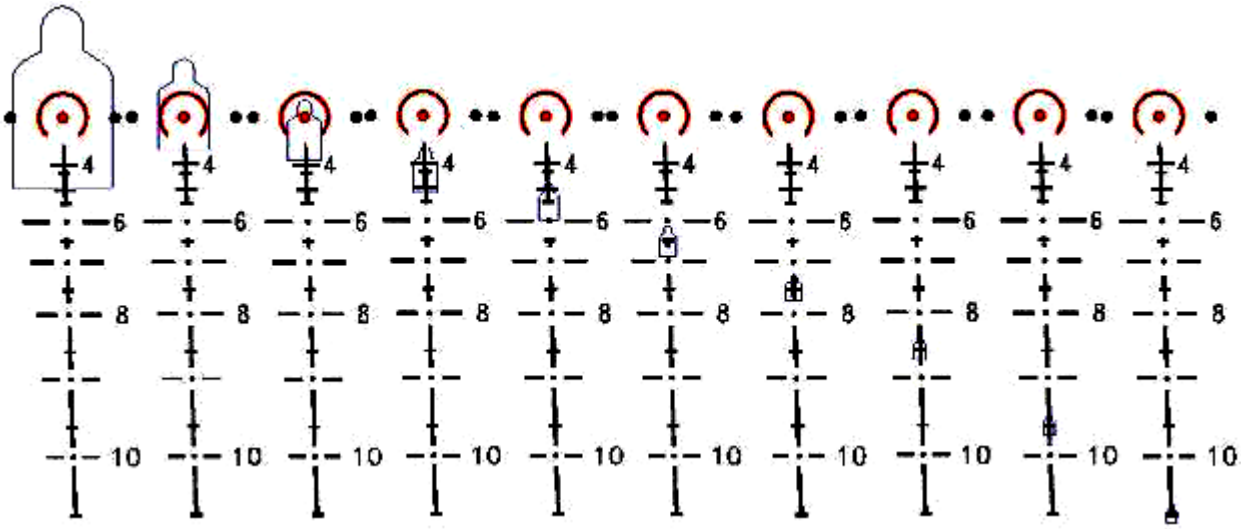

100m 200m 300m 400m 500m 600m 700m 800m 900m 1000m

ZEROING THE SDO AND RMR.

a. Adjustment increments are laser etched into the side of the SDO.

1. Left side of the optic, adjustment increments are in centimeters.

2. Right side of the optic, adjustment increments are in Inches

100m/300m Zero for the SDO

a. To Zero the SDO from 100m, (preferred for the IAR) the top edge of the center dot is used as POA/POI. This method ensures maximum accuracy to 1000m utilizing the Bullet Drop Compensator

b. . **At 100m, 5 clicks equal 2".**

c. The preferred method for the host weapon is to adjust group on target at 300m utilizing the tip of the vertical post.

d. **At 300m, 2 clicks equal 3".**

Ideally zero at 300m (vertical tip is a more precise aiming point). BDC can be aligned from any known distance using the appropriate aiming point for target range.

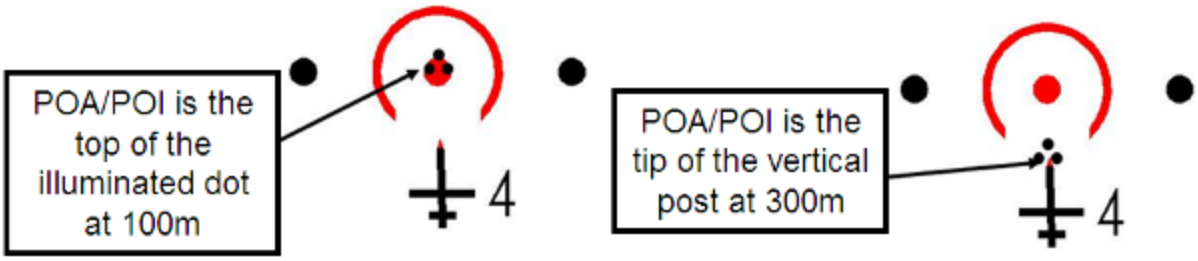

100m Zero for the RMR

a. To Zero the RMR, adjust POA/POI to the top edge of the 9 MOA dot at 100m.

b. **1 click equals 1" at 100m.**

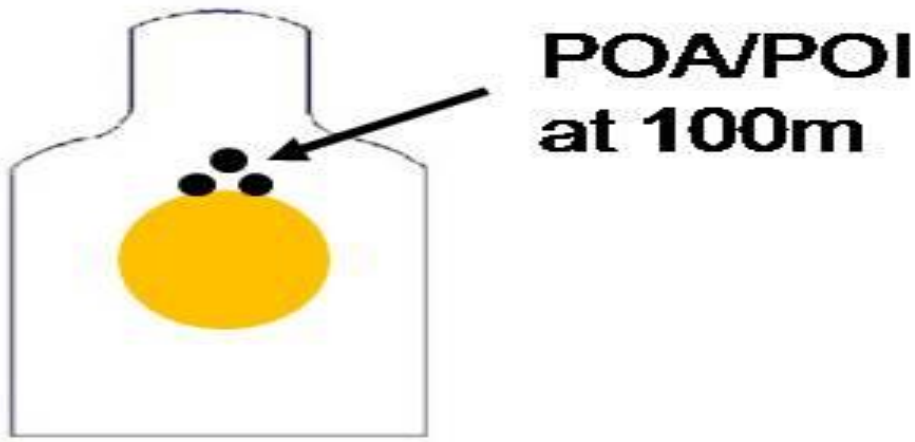

The following steps can be used to zero the SDO

Step	Action	Diagram
1	Conduct an Initial Laser Boresight (LBS) of the weapon looking through the SDO (vice the RMR) IAW LBS manufacturer steps	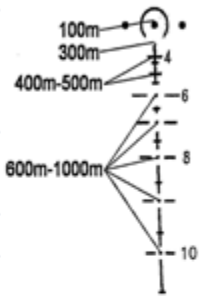
2	At a distance of 33m fire three (3) rounds at a BZO or field expedient BZO target using the 33m point of aim	
3	Adjust the point of aim to the point on the target where the impacts of the rounds were achieved	
4	Repaet steps 2 and 3 with three additional rounds	
5	With 4 rounds for confirmation, repeat steps 2 and 3 making any final adjustments	
6	Move the SAW to 100m	
7	Repeat steps 2 to 5 (groups of 3, 3 and 4 rds) with up to 10 rds total to confirm the weapon is zeroed at 100m with the appropriate point of aim	
8	Still at a distance of 100m, stabalize the weapon so that the 100m point of aim is observed through the SDO	
9	Move the RMR reticle using the adjustment screws so that it has the same point of aim as the SDO	
10	The SDO and the RMR are now zeroed for 100m. Adjustmenst for range can be made with appropriate use of the bullet drop compensator in the SDO	

MAINTENANCE.

The SDO requires very little maintenance. If the lens becomes dirty, wash using fresh water and a soft clean cloth.

a. To clean the SDO utilizing the LENSPEN:

1. First depress and push forward the lens brush slider. This will expose the lens brush.

2. Use this brush to remove all foreign material from the unit.

3. Remove the cap from the opposite end of the LENSPEN to expose the felt lens cleaner. Starting in the center of the lens, press the surface of the lens cleaner against the lens and in a spiral motion, work from the center to the outside edge of the lens.

4. When finished, depress the lens brush slider and retract the brush into the LENSPEN. Replace the cap over the felt lens cleaner.

Summary

Munitions are an important asset at the squad and platoon level. Employed correctly, the AT-4, grenades, and pyrotechnics are all combat multipliers that can increase any unit's effectiveness and lethality on the battlefield.

The M203 portion covered the history, description and the role of the M203 40 mm grenade launcher within the Marine Corps. Additional topics discussed included both offensive and defensive employment considerations of the M203, the types of ammunition available and their uses, and proper handling procedures to include assembly and disassembly, immediate and remedial actions, and proper firing positions, including the required additions to an M16 firing position needed to accommodate the M203.

The M27 portion briefly covered the history of the M27 and described the characteristics of the weapon, ammunition and employment considerations. We also covered the proper handling of this weapon, to include proper immediate and remedial actions, and care and cleaning.

The SDO portion walked through the mounting procedures, BZO procedures, and care and cleaning procedures for the SDO and the RMR.

References

40-mm Grenade Launcher, M203 FM 3-22.31

Appropriate Equipment Manual

Commander's Tactical Handbook MCRP 3-11.1A

Grenades and Pyrotechnic Signals FM 3-23.30

Light Anti-Armor Weapons FM 3-23.25

Operator's Manual, 40mm Grenade Launcher, M203 (Ch 1&2) TM 07700B-10

Operator's Manual, Infantry Automatic Rifle TM 11810A-OR

Operator's Manual, SU-258/PVQ Squad Day Optic (SDO) TM 11758A-OI